泰莱微波 Talent Microwave

Suzhou Talent Microwave,Inc
sales@talentmw.com
www.talentmw.com

Low Noise Amplifier

0.1-26GHz/4.0dB NF/28dB Gain/21dBm P1dB Model: TLLA0.1G26G-28-50

TLLA0.1G26G-28-50 is a low noise amplifier with a typical small signal gain of 28 dB and a nominal noise figure of 4.0dB across the frequency range of 0.1 to 26 GHz. The DC power requirement for the amplifier is +12 V DC/360 mA. The input and output port configuration offers coax adapter structure with 2.92mm female.

Features:

- Frequency range: 0.1-26 GHz
- Gain: 28dB Typ
- Noise Figure: 4.0dB Typ
- Good Power and Gain Flatness
- 50 Ohm Matched Input / Output

Applications:

- Communication systems

电气特性 Electrical Characteristics:

参数 Parameter	Min	Typ	Max	单位 Units
频率范围 Frequency range	0.1		26	GHz
小信号增益 Small Signal Gain	27	28		dB
增益平坦度 Gain Flatness		±2.5	±3.0	dB
噪声系数 Noise Figure		4.0	6.0	dB
线性输出功率 Output P1dB	18	21		dBm
输出三阶交调 Output IP3		30		dBm
输入驻波 Input VSWR		1.8		:1
输出驻波 Output VSWR		1.8		:1
直流电压 DC Voltage		+12		V DC
直流电流 DC Supply Current		360		mA
阻抗 Impedance		50		Ohms

*Performance may degrade below 300 MHz. Please refer to below typical test plots

机械特性 Mechanical Specifications:

参数 Parameter	指标 Value	单位 Units
输入/输出接口 Input /Output Connector	2.92mm Female/2.92mm Female	
直流偏置 DC Bias	Solder Pin	
尺寸 Size	35*40*12	mm
重量 Weight	60	g

Suzhou Talent Microwave,Inc
sales@talentmw.com
www.talentmw.com

绝对最大值 Absolute Maximum Ratings:

参数 Parameter	指标 Value
供电偏置电压 Supply Bias Voltage	TBD
输入功率 RF Input Power	-5 dBm
ESD灵敏度 ESD sensitivity (HBm)	Class 0, passed 150V



Simple 220V System
Available SAC option

外形图 Outline Drawing:

Unit:mm; Tolerance:±0.1mm

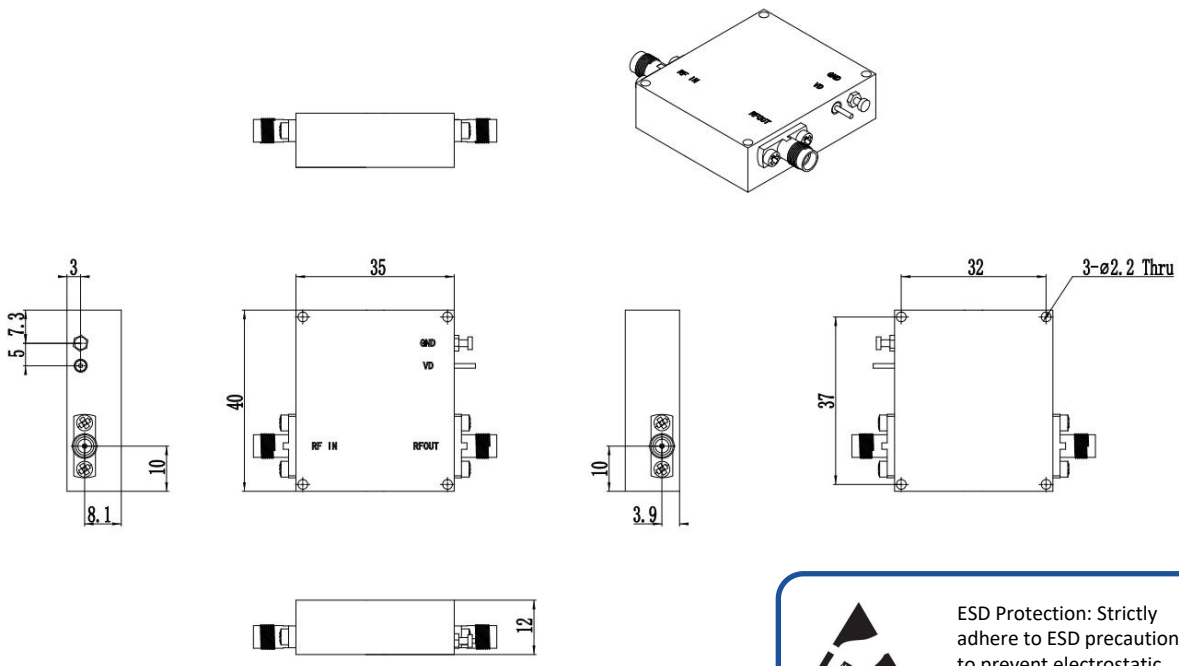

ESD Protection: Strictly adhere to ESD precautions to prevent electrostatic damage.

***Heat Sink Required During Operation

温度环境 Environmental Conditions:

参数 Parameter	Min	Typ	Max	单位 Units
操作温度 Operating Temperature	-40		+70	℃
存储温度 Non-operating Temperature	-55		+85	℃
相对湿度 Relative humidity		95		%
海拔 Altitude	50,000			feet
震动 Shock / Vibration(MIL-STD-810F)	25g rms (15 degree 2KHz) endurance, 1 hour per axis			
冲击 Shock(non operating)	20G for 11msc half sin wave,3 axis both directions			

Suzhou Talent Microwave,Inc
sales@talentmw.com
www.talentmw.com

订货信息 Ordering Information:

标准型号 Base Number	描述 Description	版本号 Revision
TLLA0.1G26G-28-50	Low Noise Amplifier, 0.1-26GHz, Noise Figure:4.0dB, Gain:28 dB,P1dB:21dBm,+12V DC,Without Heatsink	Rev.1.1
TLLA0.1G26G-28-50-HS	Low Noise Amplifier, 0.1-26GHz, Noise Figure:4.0dB, Gain:28 dB,P1dB:21dBm,+12V DC,With Heatsink	Rev.1.1

典型曲线 Typical Performance Data:

Gain&VSWR vs Frequency

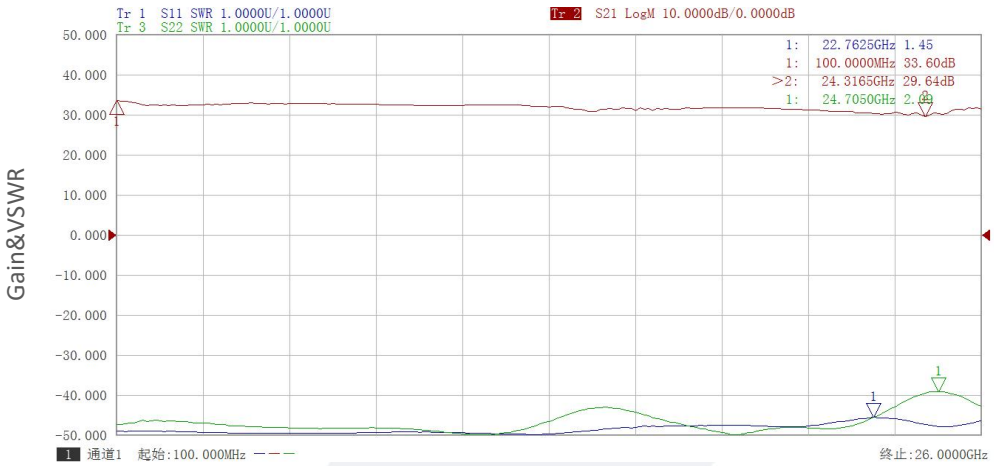

Frequency(GHz)

Noise Figure vs Frequency

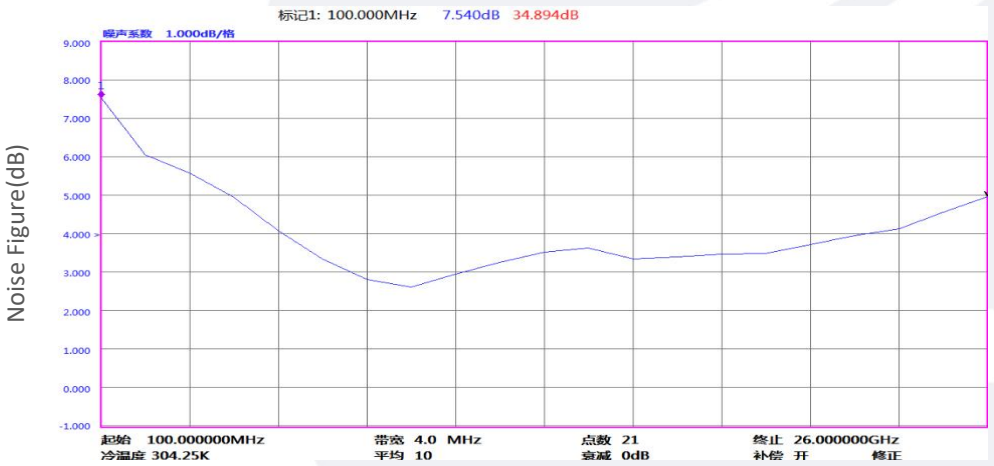

Frequency(GHz)

Note: Above data is for ref only, actual data may vary from unit to unit depending on operating environment and other factors like material lots etc.

Suzhou Talent Microwave,Inc
sales@talentmw.com
www.talentmw.com

典型曲线 Typical Performance Data:

Gain vs Output Power

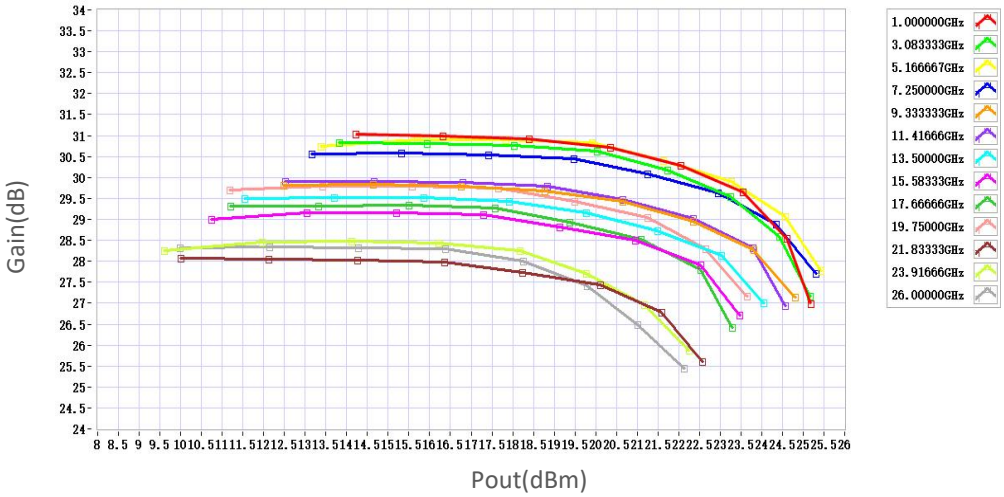

P1dB vs Frequency

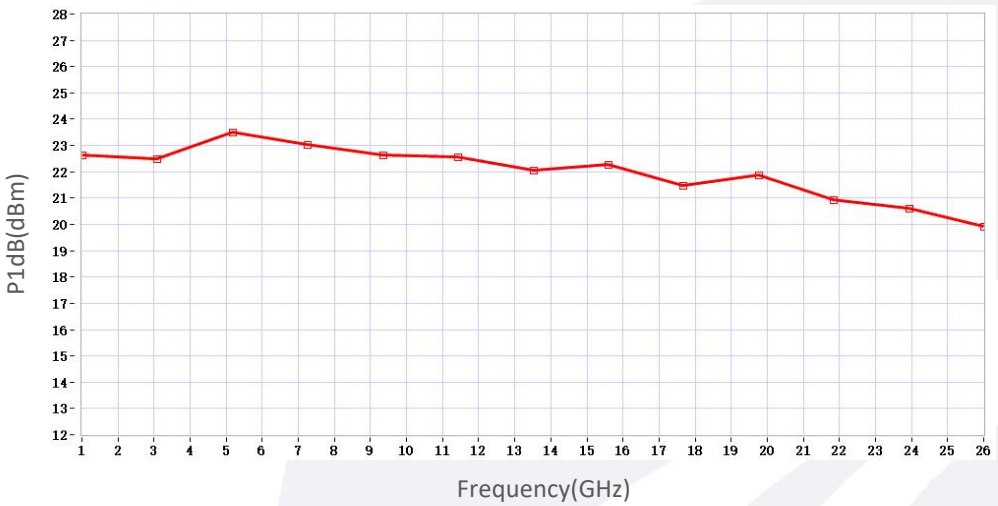

Note: Above data is for ref only, actual data may vary from unit to unit depending on operating environment and other factors like material lots etc.