Suzhou Talent Microwave,Inc
sales@talentmw.com
www.talentmw.com

Passive Frequency Multiplier

WR-5.1/X3/140-220GHz/6dBm Output Power Model: TMPM-140220-0310-5.1

TMPM-140220-0310-5.1 is a WR-5.1, X3 passive multiplier that generates second order harmonics with good harmonic and fundamental suppression. This multiplier requires an input frequency range of 46.66 to 73.33 GHz at +15 dBm RF power to yield typical +6 dBm output power at 140 to 220 GHz. The multiplier is equipped with a WR-15 waveguide and UG-385/U-M flange as its input port and a WR-5.1 waveguide and UG-387/U-M flange as its output port. The V-band,X4 multiplier of Talent model TMAM-046075-0423-15 or TMAM-046075-0420-15 can be used as the its driver for this multiplier.

Features:

- Output Frequency: 140-220GHz
- Output Power: 6dBm Typ
- Compactness,High Power&Efficiency
- Suggested drive model: TMAM-046075-0423-15 or TMAM-046075-0420-15

Applications:

- Frequency Extenders
- THz Systems
- Source Modules

电气特性 Electrical Characteristics:

参数 Parameter	Min	Typ	Max	单位 Units
输出频率 Output Frequency	140		220	GHz
输入频率 Input Frequency	46.66		73.34	GHz
输出功率 Output Power		6		dBm
输入功率 Input Power	17		24	dBm
倍频次数 Multiply Factor		3		

机械特性 Mechanical Specifications:

参数 Parameter	指标 Value	单位 Units
输出接口 Output Connector	WR-5.1/UG-387/U	
输入接口 Input Connector	WR-15/UG-387/U	
尺寸 Size	24*20*20.97	mm

Suzhou Talent Microwave,Inc
sales@talentmw.com
www.talentmw.com

绝对最大值 Absolute Maximum Ratings:

参数 Parameter	指标 Value
输入功率 RF Input Power	+24 dBm
ESD灵敏度 ESD sensitivity (HBm)	Class 0, passed 150V

外形图 Outline Drawing:

Unit:mm; Tolerance:±0.1mm

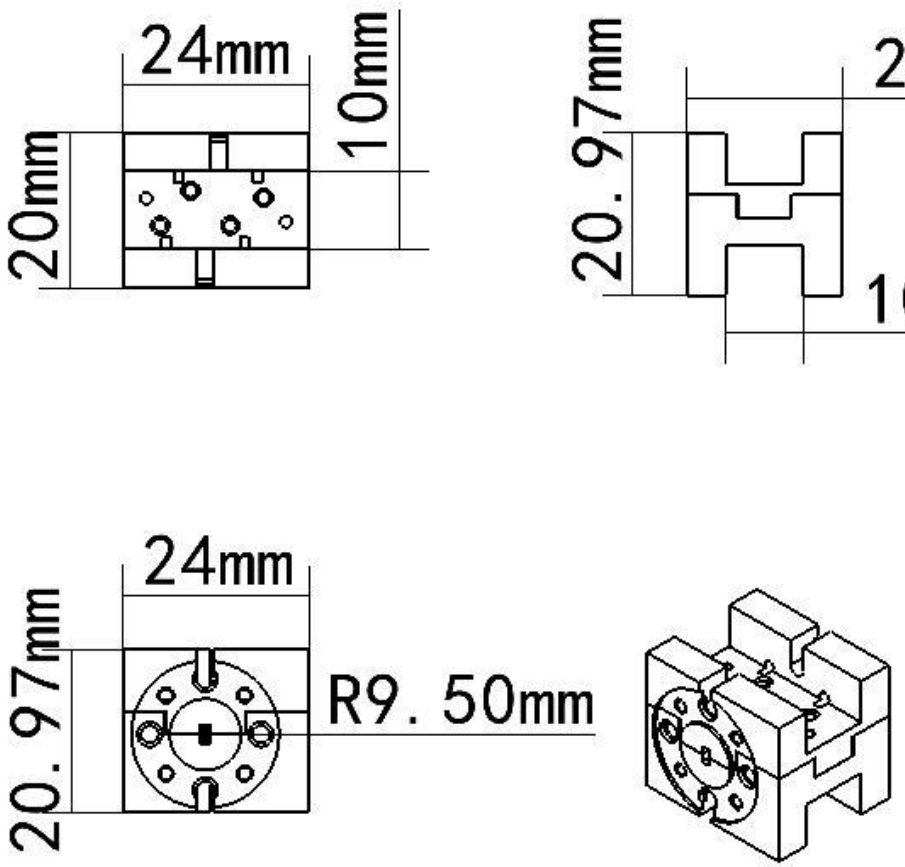

ESD Protection: Strictly adhere to ESD precautions to prevent electrostatic damage.

Suzhou Talent Microwave,Inc
sales@talentmw.com
www.talentmw.com

温度环境 Environmental Conditions:

参数 Parameter	Min	Typ	Max	单位 Units
操作温度 Operating Temperature	-10		+65	℃
存储温度 Non-operating Temperature	-45		+85	℃
相对湿度 Relative humidity		95		%
海拔 Altitude	10,000			feet
震动 Shock / Vibration(MIL-STD-810F)	25g rms (15 degree 2KHz) endurance, 1 hour per axis			
冲击 Shock(non operating)	20G for 11msc half sin wave,3 axis both directions			

订货信息 Ordering Information:

标准型号 Base Number	描述 Description	版本号 Revision
TMPM-140220-0310-5.1	Passive Frequency Tripler X3,140-220GHz, 6dBm Output Power,WR-5.1	Rev.1.1

典型曲线 Typical Performance Data:

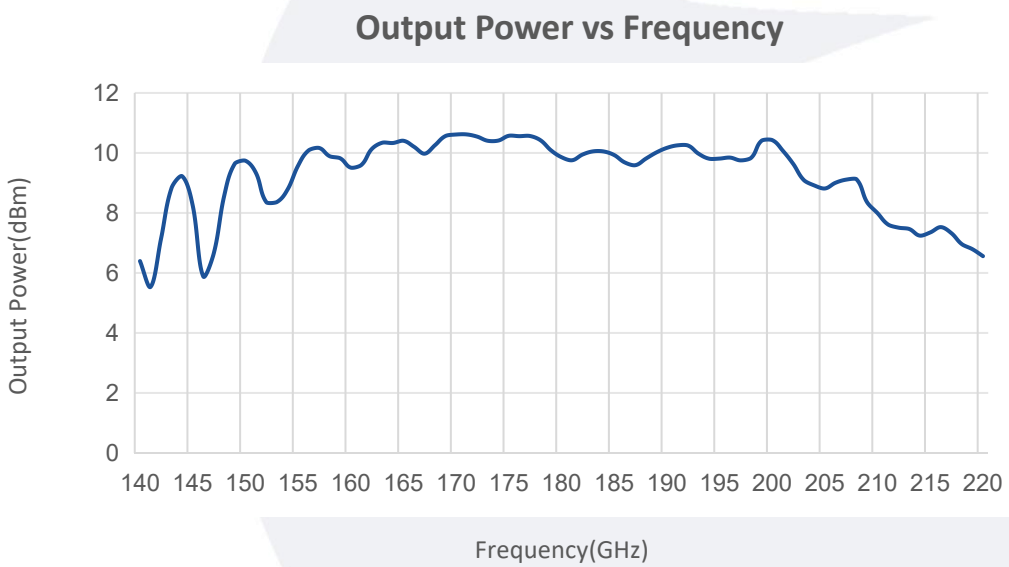

Note: Above data is for ref only, actual data may vary from unit to unit depending on operating environment and other factors like material lots etc.