泰莱微波 Talent Microwave

Suzhou Talent Microwave,Inc
sales@talentmw.com
www.talentmw.com

High Power Directional Coupler

4-8GHz/50dB Coupling/N Female

Model: TC-4080-50N-100W

TC-4080-50N-100W is a high power directional coupler that delivers a 50 dB nominal coupling level and 8 dB minimum directivity across the full frequency range from 4 to 8GHz. It is a three-port passive device that can couple a portion of the power from the main transmission line to the auxiliary line in a directional manner.

Features:

- Output Frequency: 4-8GHz
- Max Power: 100W
- Stackable mechanical design
- Low Insertion Loss
- Moderate Directivity
- 50 Ohm Matched Input / Output

Applications:

- Test Labs
- Instrumentations
- Sub-assemblies

电气特性 Electrical Characteristics:

参数 Parameter	Min	Typ	Max	单位 Units
工作频率 Frequency Range	4		8	GHz
插入损耗 Insertion Loss(Excl coupling)			1.0	dB
耦合度 Coupling		50±1		dB
方向性 Directivity	8			dB
主线驻波 Main Line VSWR			1.5	:1
耐功率 Power Handling			100	W
阻抗 Impedance		50		Ohms

机械特性 Mechanical Specifications:

参数 Parameter	指标 Value	单位 Units
操作温度 Operating Temperature	-40 to +80	℃
RF接口 RF Connector	N Female	
耦合接口 Coupling Connector	N Female	
尺寸 Size	55*30*20	mm

Suzhou Talent Microwave,Inc
sales@talentmw.com
www.talentmw.com

外形图 Outline Drawing:

Unit:mm

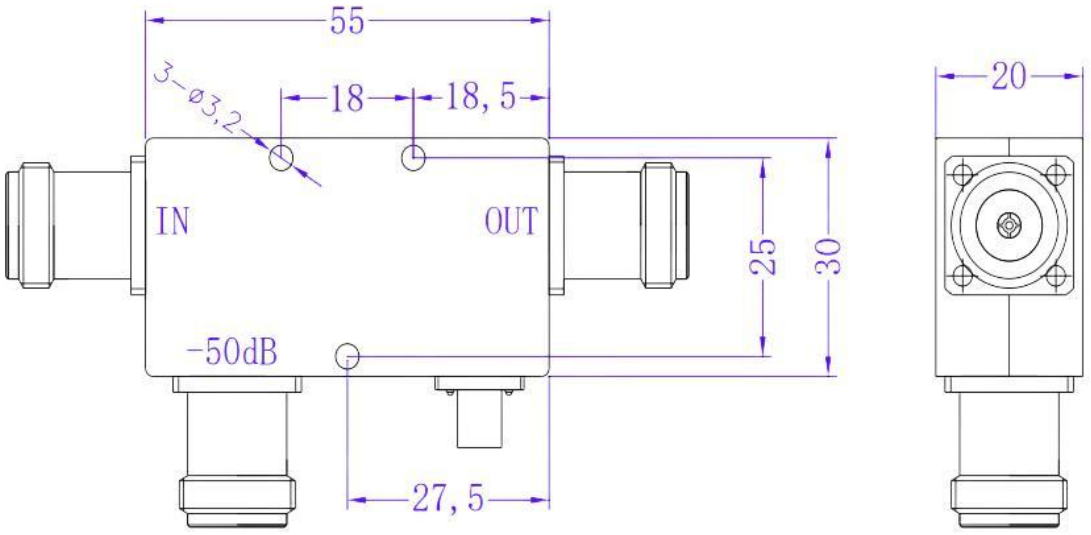

ESD Protection: Strictly adhere to ESD precautions to prevent electrostatic damage.

订货信息 Ordering Information:

标准型号 Base Number	描述 Description	版本号 Revision
TC-4080-50N-100W	High Power Directional Coupler 4-8GHz, Coulping:50dB, N Female	Rev.1.0