泰莱微波 Talent Microwave

Suzhou Talent Microwave,Inc
sales@talentmw.com
www.talentmw.com

Coax Dual-Directional Coupler

6-18GHz/30dB Coupling/SMA Female

Model: TDC-60180-30S

TDC-60180-30S is a coax dual-directional coupler that delivers a 30 dB nominal coupling level and 10 dB minimum directivity across the full frequency range from 6 to 18GHz. It is a four-port passive device that can couple a portion of the power from the main transmission line to the auxiliary line in a directional manner.

Features:

- Output Frequency: 6-18GHz
- Max Power: 50W
- Stackable mechanical design
- Low Insertion Loss
- Moderate Directivity
- 50 Ohm Matched Input / Output

Applications:

- Test Labs
- Instrumentations
- Sub-assemblies

电气特性 Electrical Characteristics:

参数 Parameter	Min	Typ	Max	单位 Units
工作频率 Frequency Range	6		18	GHz
插入损耗 Insertion Loss(Excl coupling)		0.8	1.0	dB
耦合度 Coupling		30±1		dB
方向性 Directivity	10	10		dB
主线驻波 Main Line VSWR			1.5	:1
耐功率 Power Handling			50	W
阻抗 Impedance		50		Ohms

机械特性 Mechanical Specifications:

参数 Parameter	指标 Value	单位 Units
操作温度 Operating Temperature	-45 to +85	℃
RF接口 RF Connector	SMA Female	
尺寸 Size	66*15*11	mm

Suzhou Talent Microwave,Inc
sales@talentmw.com
www.talentmw.com

外形图 Outline Drawing:

Unit:mm

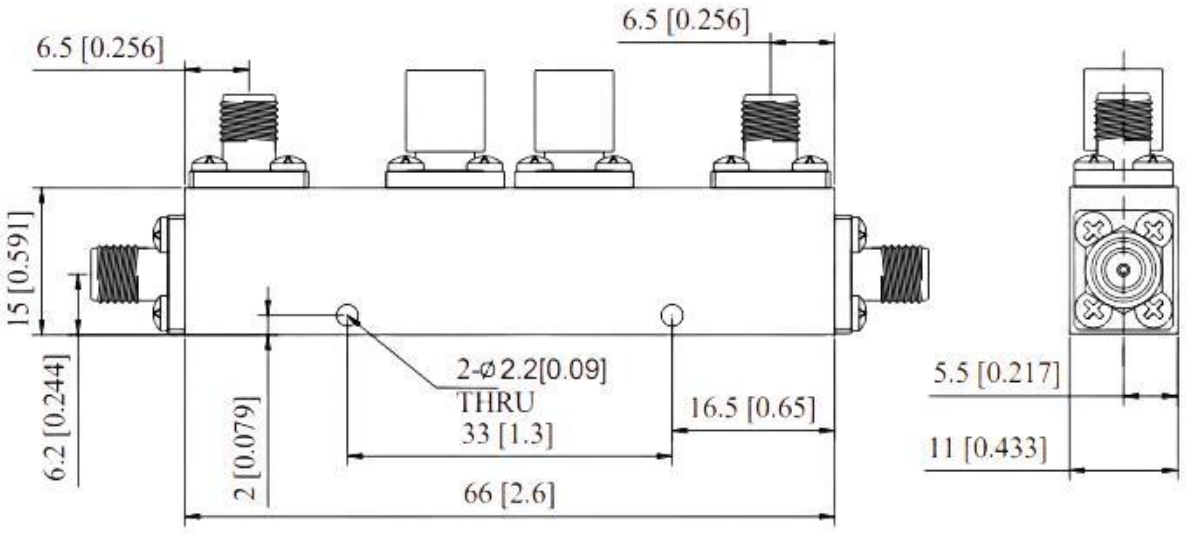

ESD Protection: Strictly adhere to ESD precautions to prevent electrostatic damage.

订货信息 Ordering Information:

标准型号 Base Number	描述 Description	版本号 Revision
TDC-60180-30S	Coax Dual-Directional Coupler 6-18GHz, Coulping:30dB, SMA Female	Rev.1.0