泰莱微波 Talent Microwave

Suzhou Talent Microwave,Inc
sales@talentmw.com
www.talentmw.com

Coax Directional Coupler

18-50GHz/10dB Coupling/2.4mm Female

Model: TC-180500-10-2.4

TC-180500-10-2.4 is a coaxial directional coupler that delivers a 10 dB nominal coupling level and 10 dB minimum directivity across the full frequency range from 18 to 50 GHz. It is a three-port passive device that can couple a portion of the power from the main transmission line to the auxiliary line in a directional manner.

Features:

- Output Frequency:18-50GHz
- Coupling: 10dB Typ
- Stackable mechanical design
- Low Insertion Loss
- Moderate Directivity
- 50 Ohm Matched Input / Output

Applications:

- Test Labs
- Instrumentations
- Sub-assemblies

电气特性 Electrical Characteristics:

参数 Parameter	Min	Typ	Max	单位 Units
工作频率 Frequency Range	18		50	GHz
插入损耗 Insertion Loss (不含耦合插损 Excl Coupling)		2.0	2.6	dB
耦合度 Coupling		10±1.2		dB
方向性 Directivity	10	12		dB
耐功率 Power Handling			50	W
驻波 VSWR			1.9	:1
阻抗 Impedance		50		Ohms

机械特性 Mechanical Specifications:

参数 Parameter	指标 Value	单位 Units
操作温度 Operating Temperature	-55-+85	℃
输入/输出接口 Input/Output Connector	2.4mm Female/2.4mm Female	
尺寸 Size	26*13*11	mm

Suzhou Talent Microwave,Inc
sales@talentmw.com
www.talentmw.com

外形图 Outline Drawing:

Unit:mm

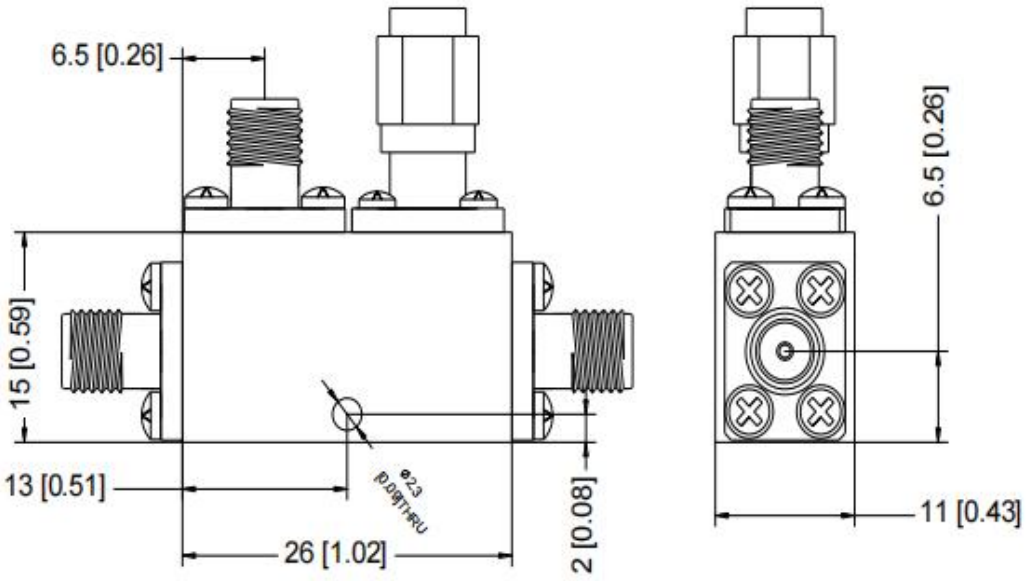

ESD Protection: Strictly adhere to ESD precautions to prevent electrostatic damage.

订货信息 Ordering Information:

标准型号 Base Number	描述 Description	版本号 Revision
TC-180500-10-2.4	Coaxial Directional Coupler 18-50GHz, Coulping:10dB, 2.4mm Female	Rev.1.0