泰莱微波
Talent Microwave

Suzhou Talent Microwave,Inc
sales@talentmw.com
www.talentmw.com

Coax Directional Coupler

18-40GHz/30dB Coupling/2.92mm Female

Model: TC-180400-30K

TC-180400-40K is a coaxial directional coupler that delivers a 30 dB nominal coupling level and 10 dB minimum directivity across the full frequency range from 18 to 40 GHz. It is a three-port passive device that can couple a portion of the power from the main transmission line to the auxiliary line in a directional manner.

Features:

- Output Frequency: 18-40GHz
- Coupling: 30dB Typ
- Stackable mechanical design
- Low Insertion Loss
- Moderate Directivity
- 50 Ohm Matched Input / Output

Applications:

- Test Labs
- Instrumentations
- Sub-assemblies

电气特性 Electrical Characteristics:

参数 Parameter	Min	Typ	Max	单位 Units
工作频率 Frequency Range	18		40	GHz
插入损耗 Insertion Loss (不含耦合插损 Excl Coupling)		1.0	1.2	dB
耦合度 Coupling		30±1		dB
方向性 Directivity	10	12		dB
耐功率 Power Handling			30	W
驻波 VSWR			1.7	:1
阻抗 Impedance		50		Ohms

机械特性 Mechanical Specifications:

参数 Parameter	指标 Value	单位 Units
操作温度 Operating Temperature	-55-+85	℃
输入/输出接口 Input/Output Connector	2.92mm Female/2.92mm Female	
尺寸 Size	28*15*11	mm

Suzhou Talent Microwave,Inc
sales@talentmw.com
www.talentmw.com

外形图 Outline Drawing:

Unit:mm

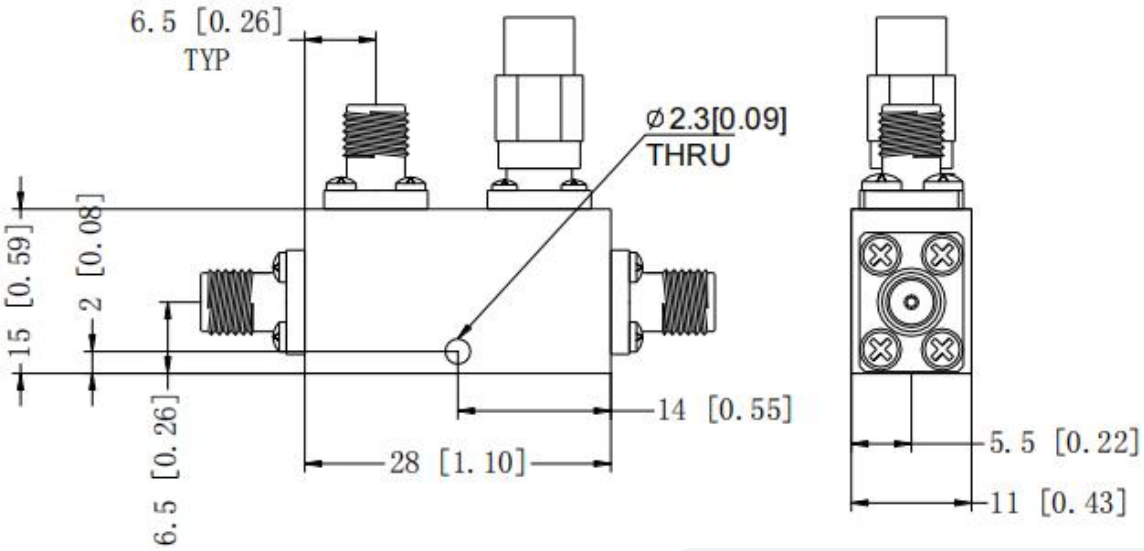

ESD Protection: Strictly adhere to ESD precautions to prevent electrostatic damage.

订货信息 Ordering Information:

标准型号 Base Number	描述 Description	版本号 Revision
TC-180400-30K	Coaxial Directional Coupler 18-40GHz, Coulping:30dB, 2.92mm Female	Rev.1.0

Suzhou Talent Microwave,Inc
sales@talentmw.com
www.talentmw.com

典型曲线 Typical Performance Data:

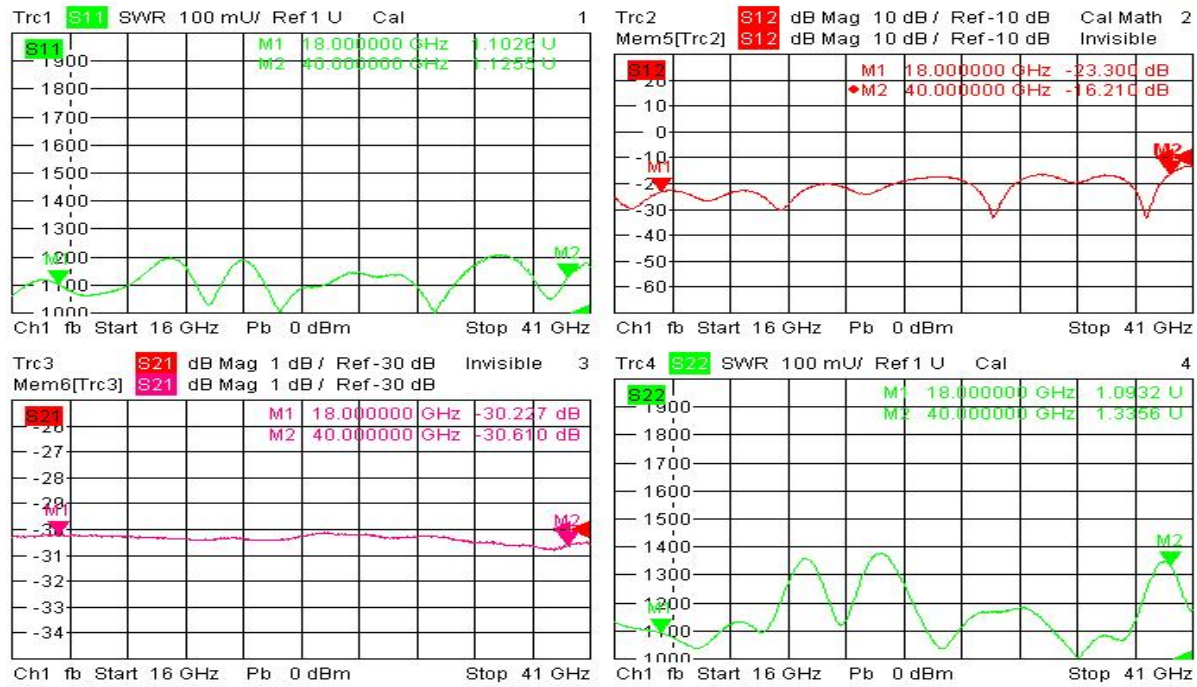

9/5/2019, 5:44 AM



9/5/2019, 5:46 AM

Note: Above data is for ref only, actual data may vary from unit to unit depending on operating environment and other factors like material lots etc.