泰莱微波 Talent Microwave

Suzhou Talent Microwave,Inc
sales@talentmw.com
www.talentmw.com

Coax Directional Coupler

8-12GHz/10dB Coupling/SMA Female

Model: TC-80120-10S

TC-80120-10S is a coaxial directional coupler that delivers a 10 dB nominal coupling level and 14 dB minimum directivity across the full frequency range from 8 to 12 GHz. It is a three-port passive device that can couple a portion of the power from the main transmission line to the auxiliary line in a directional manner.

Features:

- Output Frequency:8-12GHz
- Coupling: 10dB Typ
- Stackable mechanical design
- Low Insertion Loss
- Moderate Directivity
- 50 Ohm Matched Input / Output

Applications:

- Test Labs
- Instrumentations
- Sub-assemblies

电气特性 Electrical Characteristics:

参数 Parameter	Min	Typ	Max	单位 Units
工作频率 Frequency Range	8		12	GHz
插入损耗 Insertion Loss (不含耦合插损 Excl Coupling)		0.5	0.6	dB
耦合度 Coupling		10±1		dB
方向性 Directivity	14	15		dB
耐功率 Power Handling			50	W
驻波 VSWR			1.4	:1
阻抗 Impedance		50		Ohms

机械特性 Mechanical Specifications:

参数 Parameter	指标 Value	单位 Units
操作温度 Operating Temperature	-55-+85	℃
输入/输出接口 Input/Output Connector	SMA Female/SMA Female	
尺寸 Size	33*15*14	mm

Suzhou Talent Microwave,Inc
sales@talentmw.com
www.talentmw.com

外形图 Outline Drawing:

Unit:mm

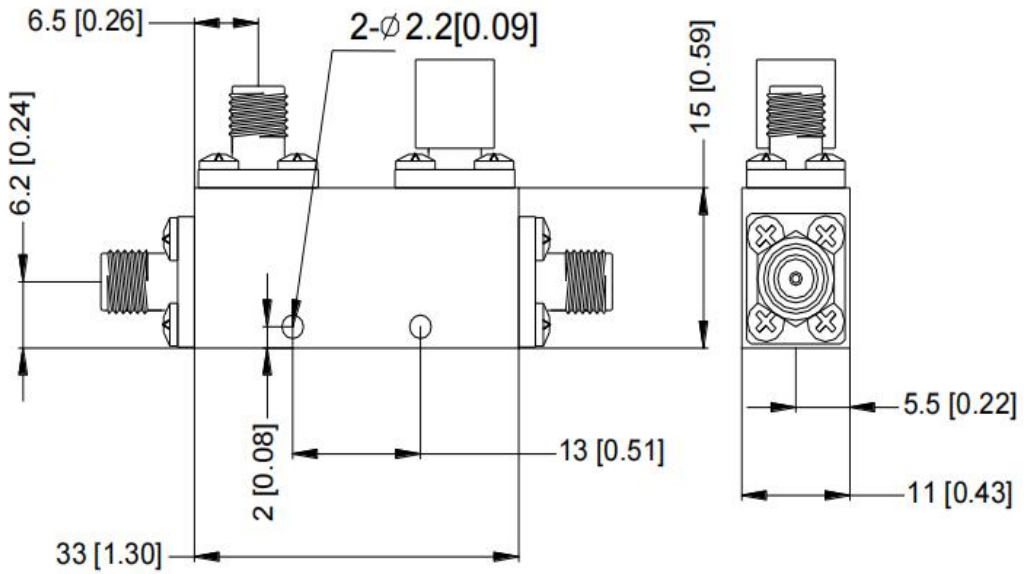

ESD Protection: Strictly adhere to ESD precautions to prevent electrostatic damage.

订货信息 Ordering Information:

标准型号 Base Number	描述 Description	版本号 Revision
TC-80120-10S	Coaxial Directional Coupler 8-12GHz, Coulping:10dB, SMA Female	Rev.1.0

Suzhou Talent Microwave,Inc
sales@talentmw.com
www.talentmw.com

典型曲线 Typical Performance Data:

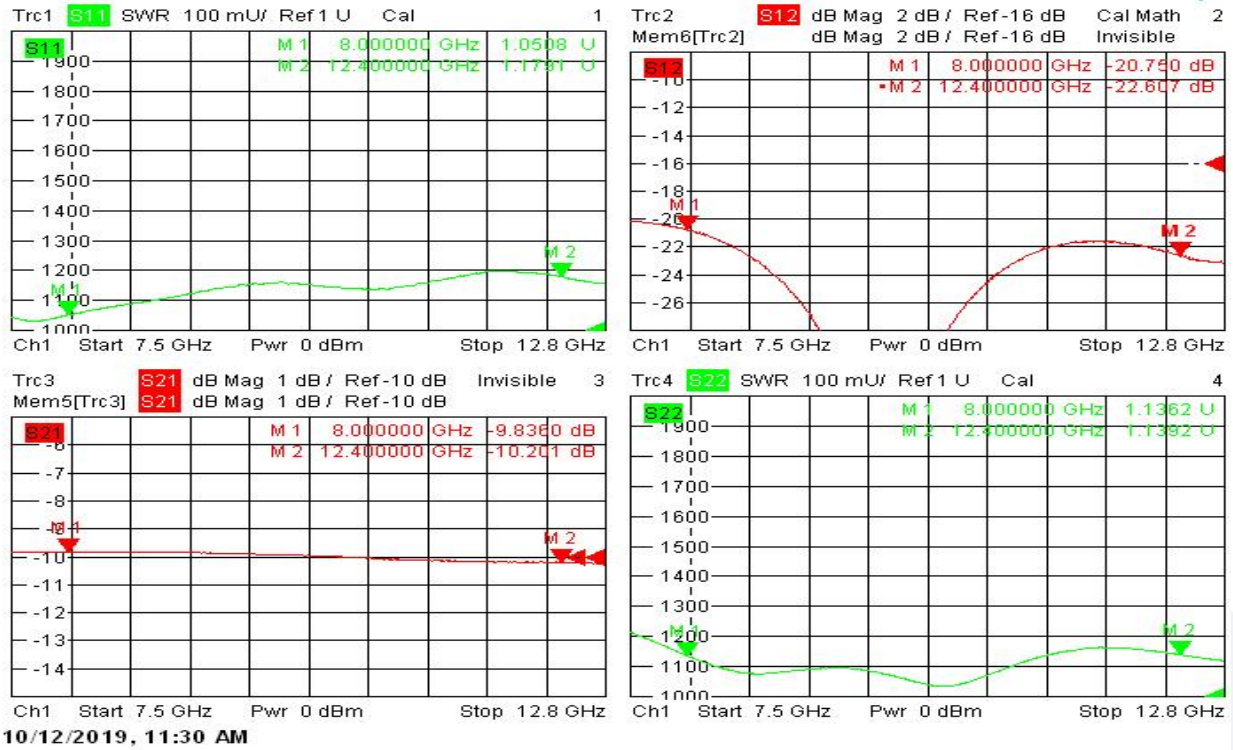

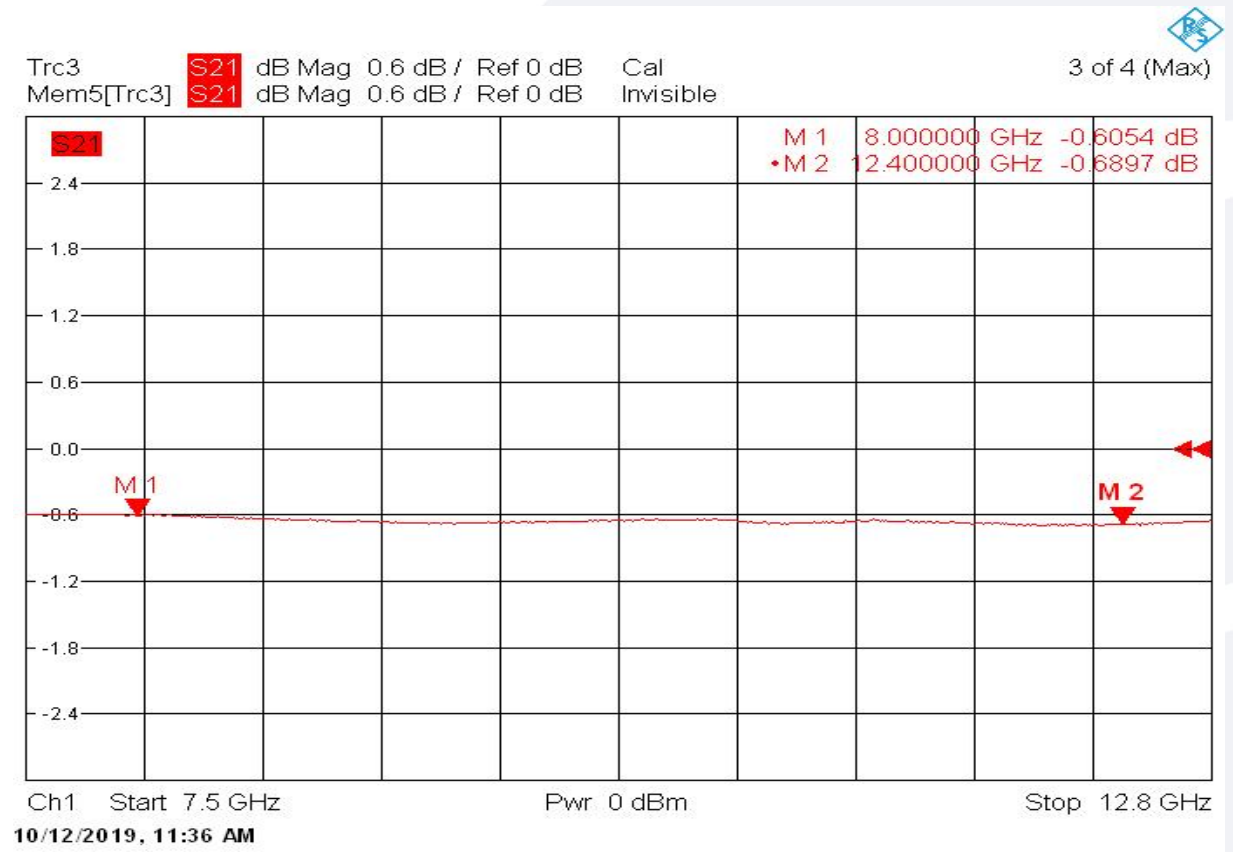

Note: Above data is for ref only, actual data may vary from unit to unit depending on operating environment and other factors like material lots etc.