泰莱微波 Talent Microwave

Suzhou Talent Microwave,Inc
sales@talentmw.com
www.talentmw.com

Dual Balance Mixer

RF: 35-110GHz/LO: 35-110GHz/IF: DC-40GHz Model: TLBM-035110-40-1.0

TLBM-035110-40-1.0 is a dual balance mixer. The mixer covers the LO and RF frequency from 35 to 110 GHz with an extremely broad IF output from DC to 40 GHz. The mixer offers a conversion loss of 10 dB typical and LO input power of 15 dBm typical.

Features:

- RF/LO coverage : 35-110GHz
- IF operation : DC-40GHz
- Conversion loss: 10dB Typ
- High LO to RF isolation
- Dual Balanced Mixer

Applications:

- Defense & federal communications
- Instrumentations

电气特性 Electrical Characteristics:

参数 Parameter	Min	Typ	Max	单位 Units
RF频率 RF Frequency	35		110	GHz
LO频率 LO Frequency	35		110	GHz
LO驱动功率 LO-Input power		15		dBm
IF频率 IF Frequency	DC		40	GHz
单边带变频损耗 SSB Conversion Loss@IF=100MHz		10		dB
射频输入驻波 RF Input VSWR			3	:1

机械特性 Mechanical Specifications:

参数 Parameter	指标 Value	单位 Units
RF端口 RF Connector	1.0mm Female	
LO端口 LO Connector	1.0mm Female	
IF端口 IF Connector	2.4mm Female	
尺寸 Size	34*24.5*10.5	mm

Suzhou Talent Microwave,Inc
sales@talentmw.com
www.talentmw.com

绝对最大值 Absolute Maximum Ratings:

参数 Parameter	指标 Value
RF功率 RF Input Power	30dBm
IF功率 IF Input Power	30dBm
LO功率 LO Input Power	30dBm
ESD灵敏度 ESD sensitivity (HBm)	Class 0, passed 150V

外形图 Outline Drawing:

Unit:mm; Tolerance:±0.1mm

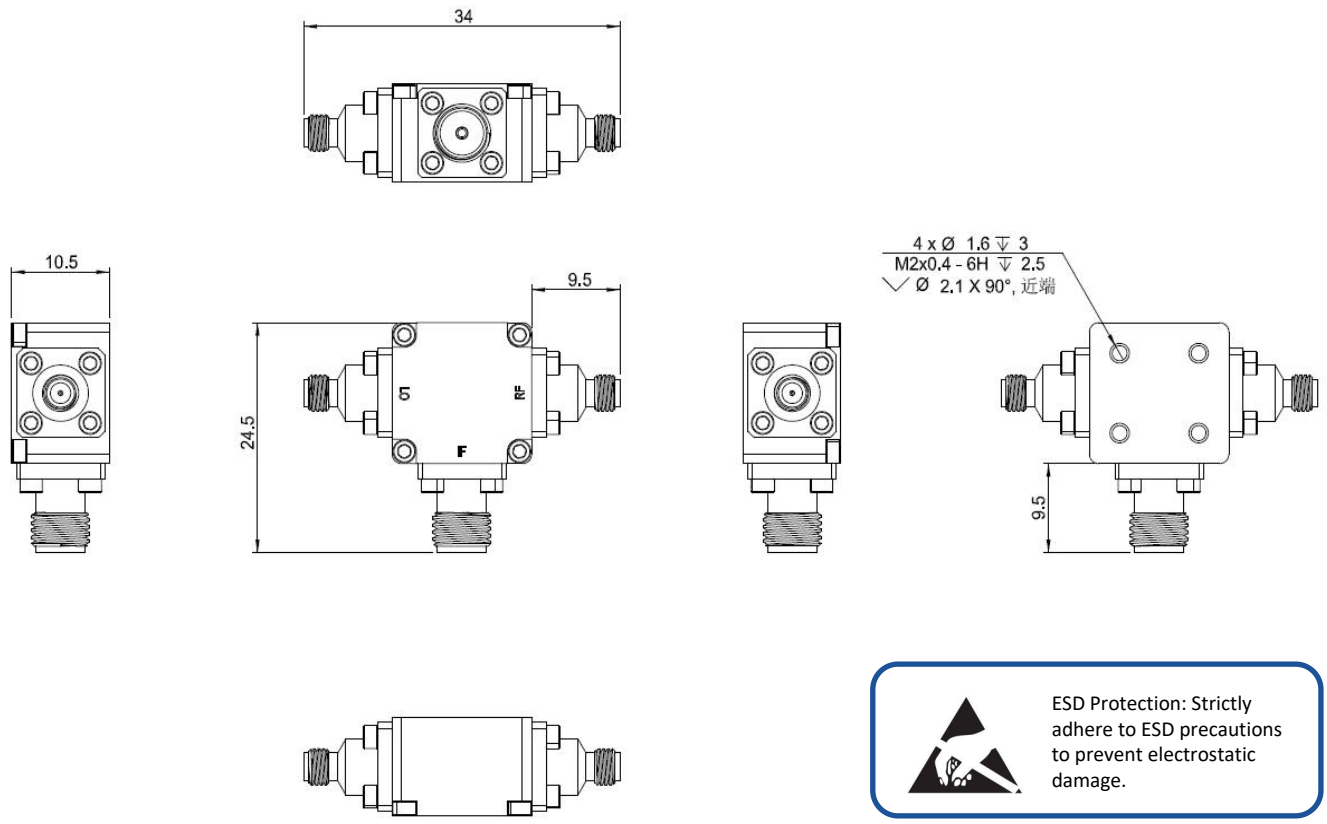

ESD Protection: Strictly adhere to ESD precautions to prevent electrostatic damage.

Suzhou Talent Microwave,Inc
sales@talentmw.com
www.talentmw.com

温度环境 Environmental Conditions:

参数 Parameter	Min	Typ	Max	单位 Units
操作温度 Operating Temperature	-45		+85	℃
存储温度 Non-operating Temperature	-55		+125	℃
相对湿度 Relative humidity		95		%
海拔 Altitude	10,000			feet
震动 Shock / Vibration(MIL-STD-810F)	25g rms (15 degree 2KHz) endurance, 1 hour per axis			
冲击 Shock(non operating)	20G for 11msc half sin wave,3 axis both directions			

订货信息 Ordering Information:

标准型号 Base Number	描述 Description	版本号 Revision
TLBM-035110-40-1.0	Dual Balanced Mixer RF:35-110GHz,LO:35-110GHz,IF:DC-40GHz	Rev.1.0

典型曲线 Typical Performance Data:

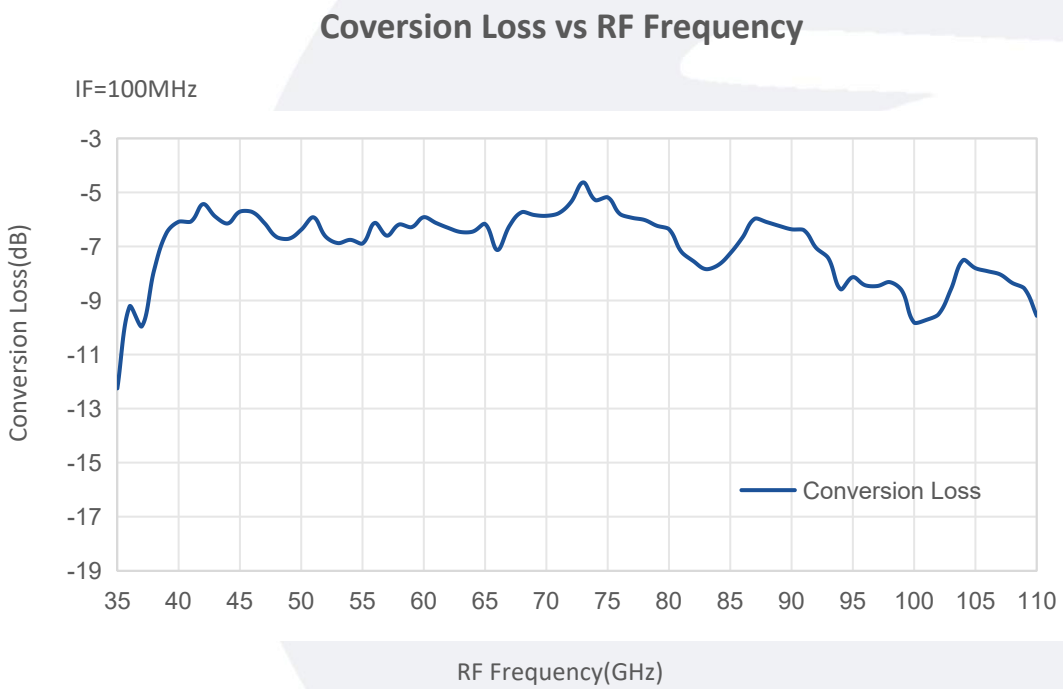

Note: Above data is for ref only, actual data may vary from unit to unit depending on operating environment and other factors like material lots etc.

Suzhou Talent Microwave,Inc
sales@talentmw.com
www.talentmw.com

典型曲线 Typical Performance Data:

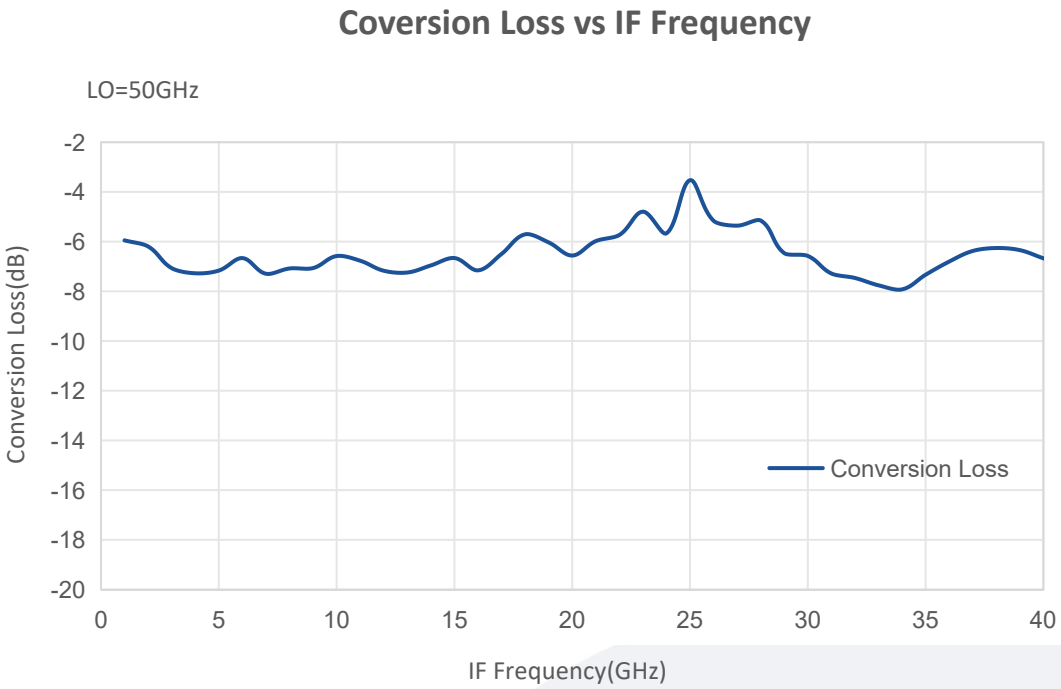

Note: Above data is for ref only, actual data may vary from unit to unit depending on operating environment and other factors like material lots etc.