泰莱微波 Talent Microwave

Suzhou Talent Microwave,Inc
sales@talentmw.com
www.talentmw.com

Power Amplifier

6-12GHz/30dB Gain/36dBm Psat

Model: TLPA6G12G-30-36

TLPA6G12G-30-36 is a power amplifier with a minimum power gain of 30 dB and a nominal Psat of 36 dBm across the frequency range of 6 to 12 GHz. The DC power requirement for the amplifier is +12 VDC/2.3 A. The input and output port configuration offers coax adapter structure with SMA female.

Features:

- Frequency range: 6-12GHz
- Gain: 30dB Min
- Output Power Psat: 36dBm Typ
- Good Power and Gain Flatness
- 50 Ohm Matched Input / Output

Applications:

- Cellular
- PCN
- GSM
- ISM
- Lab Test

电气特性 Electrical Characteristics:

参数 Parameter	Min	Typ	Max	单位 Units
频率范围 Frequency range	6		12	GHz
功率增益 Power Gain	30			dB
增益平坦度 Gain Flatness		±1.5	±2.5	dB
线性输出功率 Output P1dB		35		dBm
饱和输出功率 Output Psat		36		dBm
噪声系数 Noise Figure		6	8	dB
杂散 Spurious		-60		dBc
输入驻波 Input VSWR		1.5	2	:1
输出驻波 Output VSWR		1.5	2	:1
直流电压 DC Voltage		12		V DC
直流电流 DC Supply Current		2.3	2.5	A
阻抗 Impedance		50		Ohms

Suzhou Talent Microwave,Inc
sales@talentmw.com
www.talentmw.com

机械特性 Mechanical Specifications:

参数 Parameter	指标 Value	单位 Units
输入/输出接口 Input /Output Connector	SMA Female/SMA Female	
直流偏置 DC Bias	Solder Pin	
尺寸 Size	50*55*12(Without heatsink) 80*160*62(With heatsink)	mm
重量 Weight	820	g

绝对最大值 Absolute Maximum Ratings:

参数 Parameter	指标 Value
供电偏置电压 Supply Bias Voltage	+12 V
输入功率 RF Input Power	+12 dBm
ESD灵敏度 ESD sensitivity (HBm)	Class 0, passed 150V



Simple 220V System
Available SAC option

外形图 Outline Drawing:

Unit:mm; Tolerance:±0.1mm

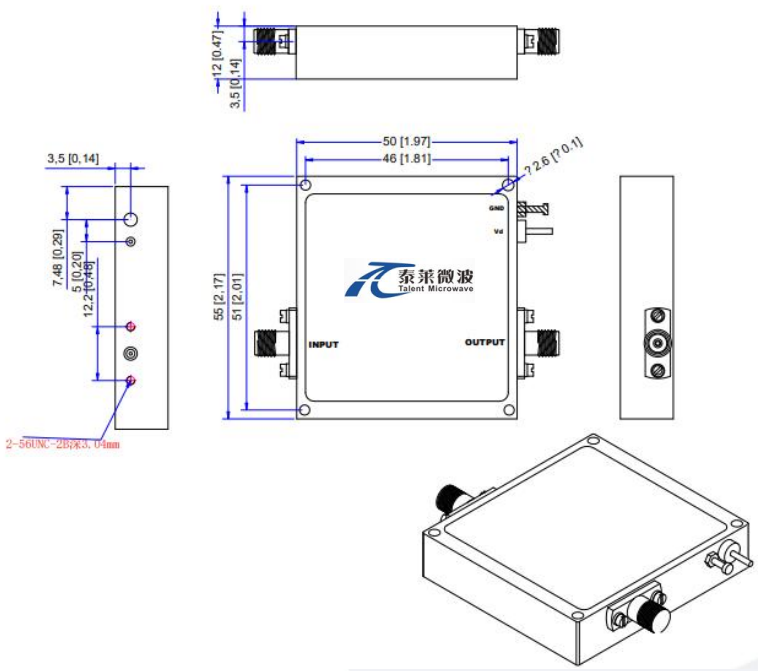

***Heat Sink Required During Operation



ESD Protection: Strictly adhere to ESD precautions to prevent electrostatic damage.

Suzhou Talent Microwave,Inc
sales@talentmw.com
www.talentmw.com

外形图 Outline Drawing:

Unit:mm; Tolerance:±0.1mm

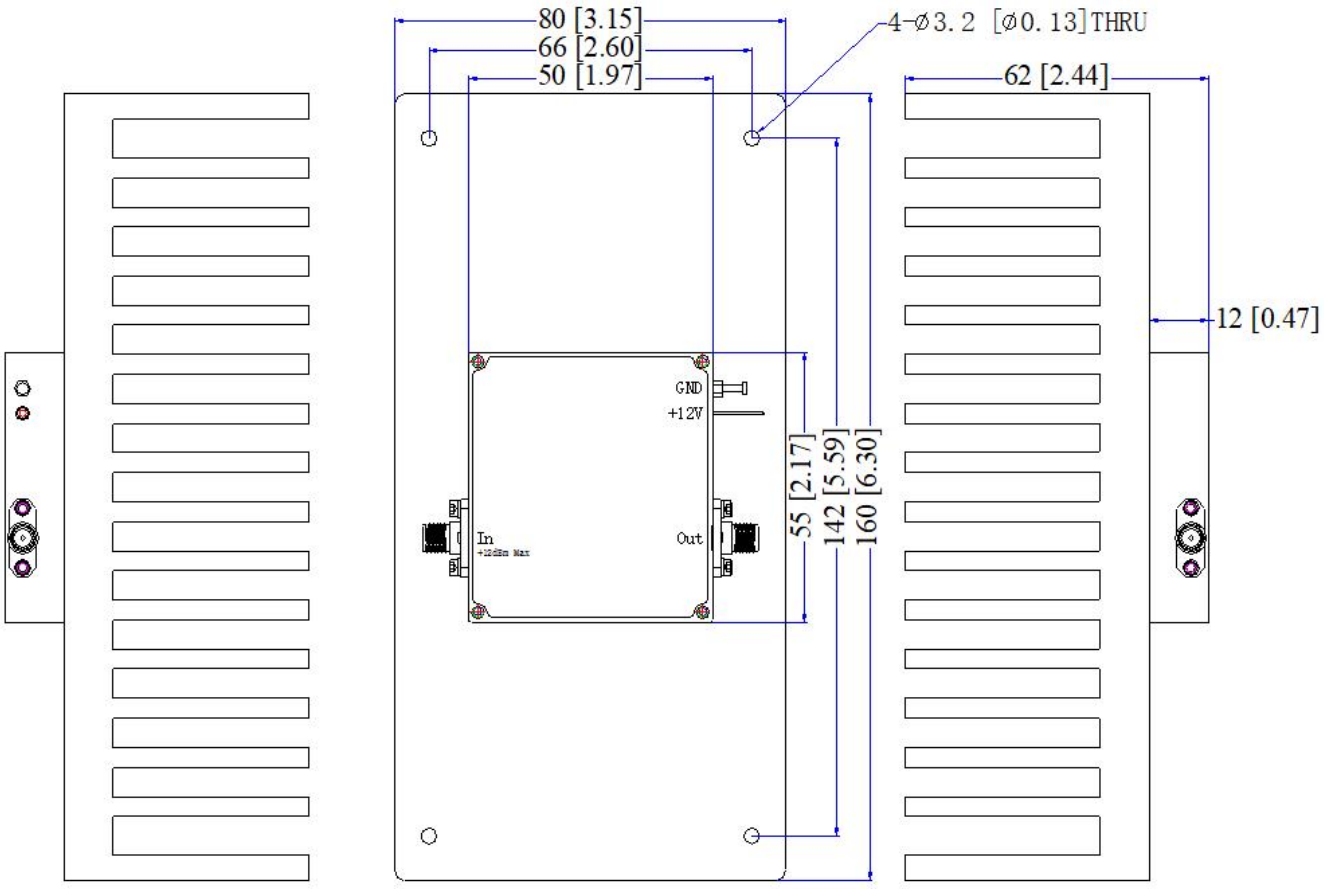

温度环境 Environmental Conditions:

参数 Parameter	Min	Typ	Max	单位 Units
操作温度 Operating Temperature*	-40		+50	℃
存储温度 Non-operating Temperature*	-50		+60	℃
相对湿度 Relative humidity		95		%
海拔 Altitude	10,000			feet
震动 Shock / Vibration(MIL-STD-810F)	25g rms (15 degree 2KHz) endurance, 1 hour per axis			
冲击 Shock(non operating)	20G for 11msc half sin wave,3 axis both directions			

*Note: For a wider temperature range, please consult the manufacturer.

Suzhou Talent Microwave,Inc
sales@talentmw.com
www.talentmw.com

订货信息 Ordering Information:

标准型号 Base Number	描述 Description	版本号 Revision
TLPA6G12G-30-36	Power amplifier 6-12GHz, Gain:30dB,Psat:36dBm,+12V DC,Without Heatsink	Rev.1.1
TLPA6G12G-30-36-HS	Power amplifier 16-12GHz, Gain:30dB,Psat:36dBm,+12V DC,With Heatsink	Rev.1.1

典型曲线 Typical Performance Data:

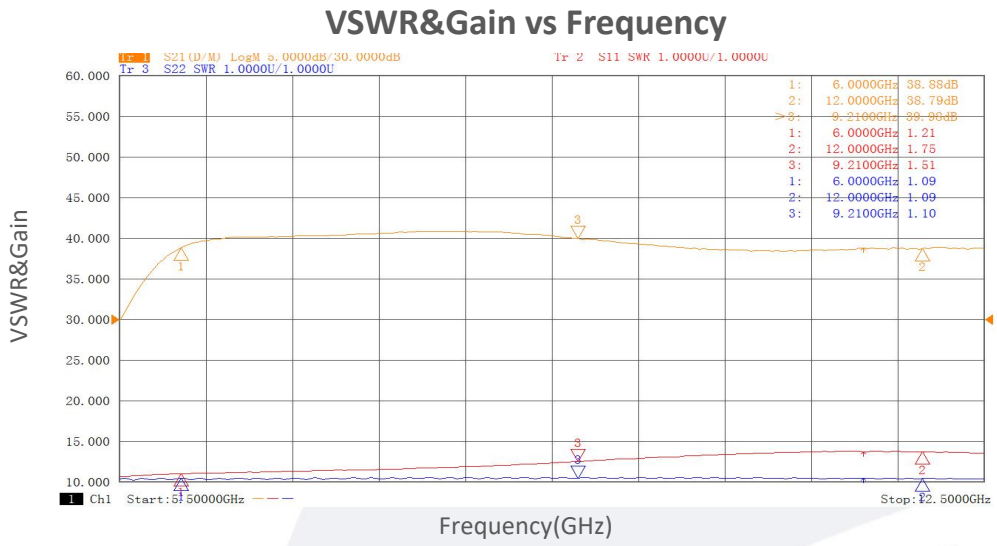

Note: Above data is for ref only, actual data may vary from unit to unit depending on operating environment and other factors like material lots etc.