泰莱微波 Talent Microwave

Suzhou Talent Microwave,Inc
sales@talentmw.com
www.talentmw.com

Coaxial Detector

10MHz-110GHz/10dBm,Input Power

Model: TPSD10M110GP

The TPSD10M110GP is a coaxial detector designed to operate from 10 MHz to 110GHz. The RF input configuration offers coax adapter structure with 1.0mm male and output port configuration offers coax adapter structure with SMA female.

Features:

- Frequency range: 10MHz-110 GHz
- Voltage sensitivity :600 V/W Typ
- High speed finline detector
- 50 Ohm Matched Input / Output

Applications:

- Electronic warfare
- Test&measurement
- System monitoring
- AM noise measurements
- leveling pulse signal sources

电气特性 Electrical Characteristics:

参数 Parameter	Min	Typ	Max	单位 Units
频率范围 Frequency range	10MHz		110GHz	
输入回波损耗 Input Return Loss		-12		dB
电压灵敏度 Voltage Sensitivity		600		V/W
最大承受功率 Max Input Power		10		dBm
输入动态范围 Input Dynamic Range			-20	dBm
阻抗 Impedance		50		Ohms

机械特性 Mechanical Specifications:

参数 Parameter	指标 Value	单位 Units
输入/输出接口 Input /Output Connector	1.0mm Female/SMA Female	
尺寸 Size	12.7*10.16*10.16	mm

泰莱微波
Talent Microwave

Suzhou Talent Microwave,Inc
sales@talentmw.com
www.talentmw.com

外形图 Outline Drawing:

Unit:mm; Tolerance:±0.1mm

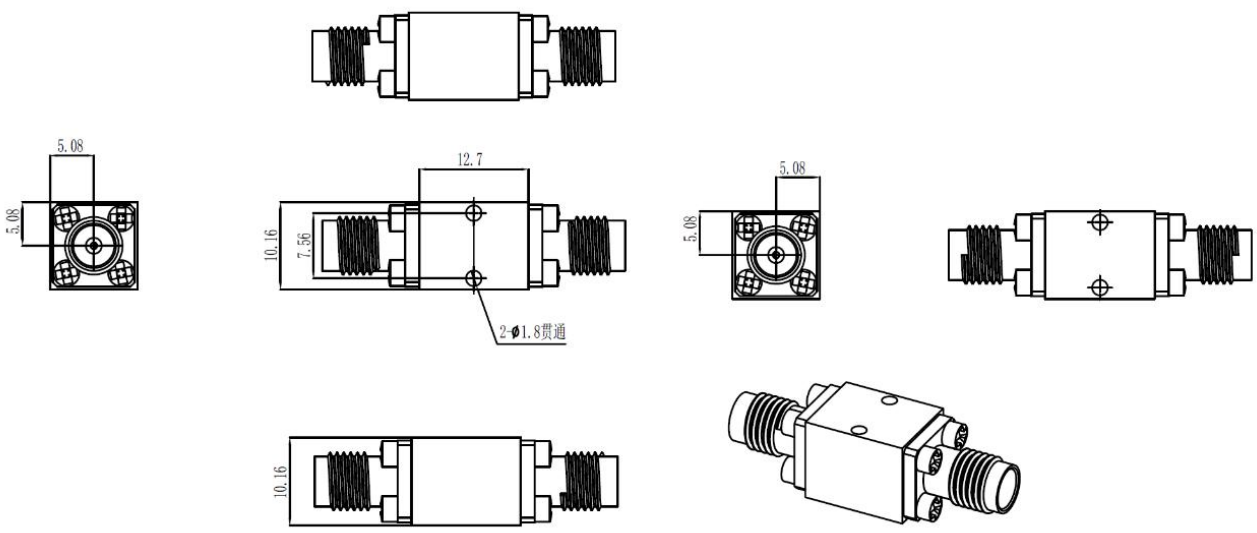

ESD Protection: Strictly adhere to ESD precautions to prevent electrostatic damage.

温度环境 Environmental Conditions:

参数 Parameter	Min	Typ	Max	单位 Units
操作温度 Operating Temperature	-40		+70	℃
存储温度 Non-operating Temperature	-55		+85	℃
相对湿度 Relative humidity		95		%
海拔 Altitude	10,000			feet
震动 Shock / Vibration(MIL-STD-810F)	25g rms (15 degree 2KHz) endurance, 1 hour per axis			
冲击 Shock(non operating)	20G for 11msc half sin wave,3 axis both directions			

订货信息 Ordering Information:

标准型号 Base Number	描述 Description	版本号 Revision
TPSD10M110GP	Coaxial Detector, 10MHz-110GHz, Voltage sensitivity :600 V/W Typ	Rev.1.0

Suzhou Talent Microwave,Inc
sales@talentmw.com
www.talentmw.com

典型曲线 Typical Performance Data:

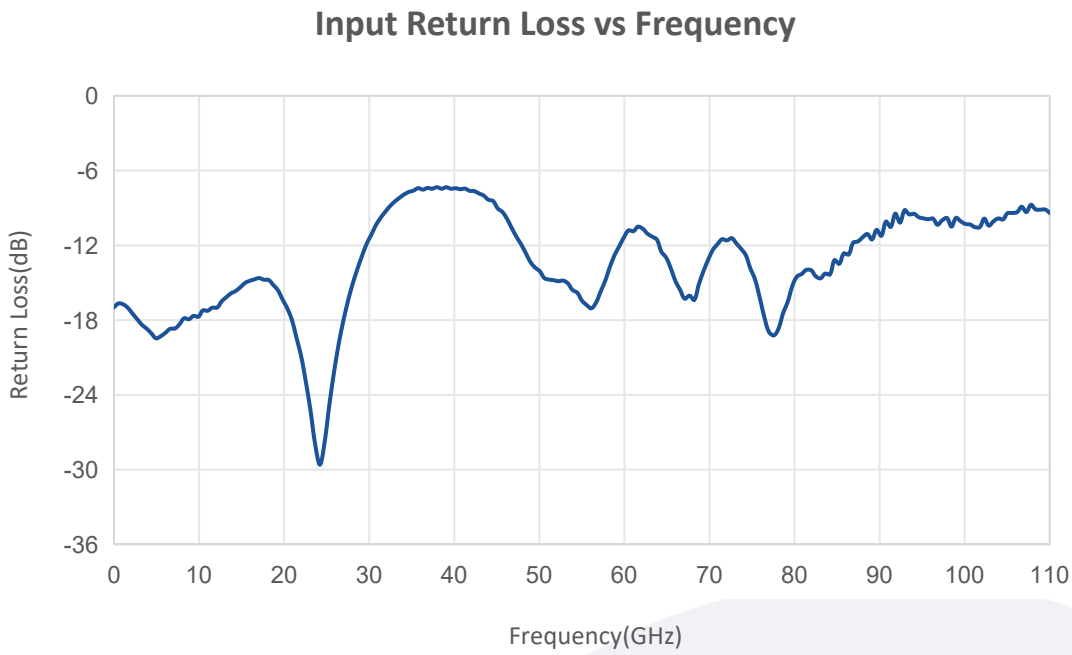

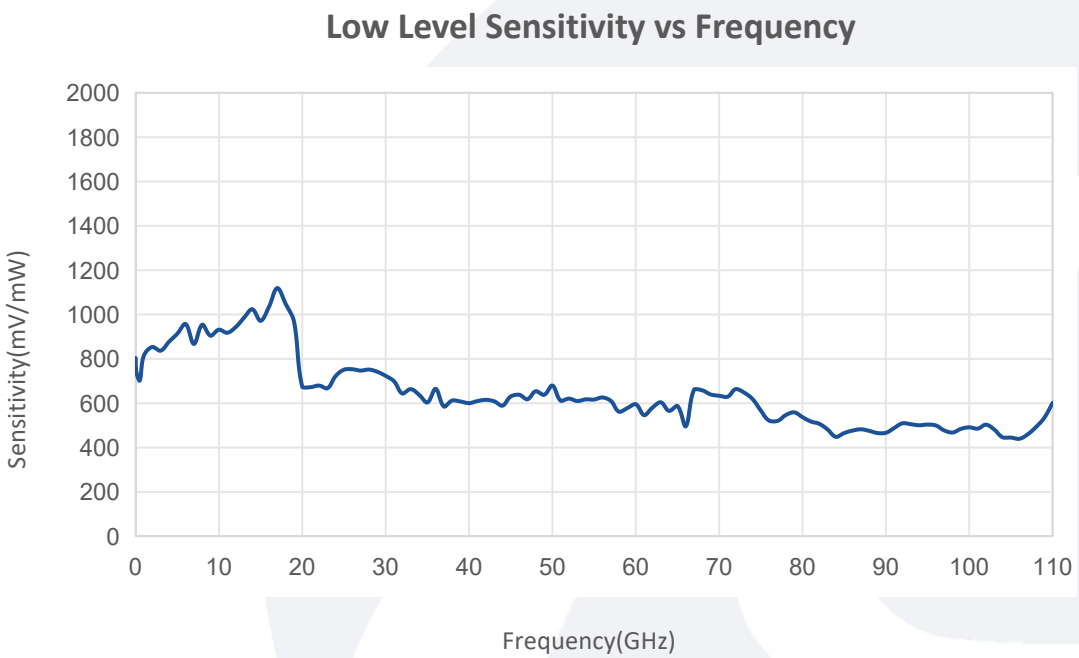

Note: Above data is for ref only, actual data may vary from unit to unit depending on operating environment and other factors like material lots etc.