泰莱微波 Talent Microwave

Suzhou Talent Microwave,Inc
sales@talentmw.com
www.talentmw.com

Straight Waveguide

WR-1.2/600-900 GHz

Model: TL-1.2SWG-2inch

TL-1.2SWG-2inch is a 2” long, straight waveguide section with a WR-1.2 waveguide and UG-387/U anti-cocking flanges. The waveguide is offered to cover the frequency range of 600 to 900 GHz.

Features:

- Operating Frequency 600 to 900 GHz
- Rugged Waveguide Configuration
- Low Insertion Loss

Applications:

- Test Instrumentation
- Instrumentations
- Lab Use

电气特性 Electrical Characteristics:

参数 Parameter	Min	Typ	Max	单位 Units
工作频率 Frequency Range	600		900	GHz
插损 Insertion Loss		TBD		dB
回波损耗 Return Loss		-20		dB

环境和机械特性 Envrionmental And Physical Characteristics:

参数 Parameter	指标 Value	单位 Units
材质 Material	Brass	
表面处理 Finish	Gold plated	
接口 Connectors	WR-1.2/UG-387/U	
长度 Length	2	Inch

Suzhou Talent Microwave,Inc
sales@talentmw.com
www.talentmw.com

外形图 Outline Drawing:

Unit:mm; Tolerance:±0.1mm

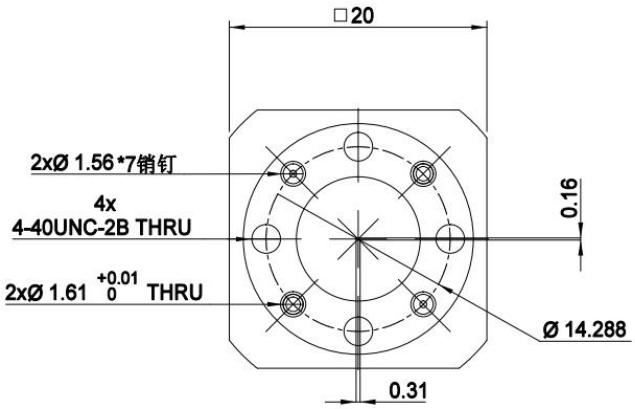

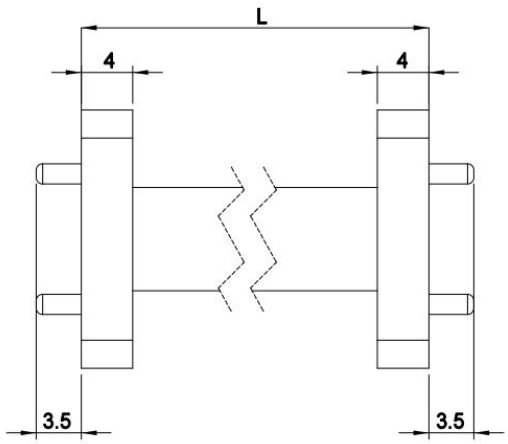



ESD Protection: Strictly adhere to ESD precautions to prevent electrostatic damage.

订货信息 Ordering Information:

标准型号 Base Number	描述 Description
TL-1.2SWG-2inch	600-900GHz, Straight Waveguide, WR-1.2