泰莱微波 Talent Microwave

Suzhou Talent Microwave,Inc
sales@talentmw.com
www.talentmw.com

Waveguide to Coax Adapter, End Launch

WR-6.5/0.6mm Male/110-170 GHz

Model: TL-6WCA0.6ME

The TL-6WCA0.6ME is end launch waveguide to coax adapters that cover the frequency range of 110 to 170GHz. It is designed for an efficient transition between the rectangular waveguide and 0.6 mm coax connector.

Features:

- Operating Frequency 110 to 170GHz
- Lower Insertion Loss and VSWR
- Instrumentation Grade
- DC Short Circuit

Applications:

- Test Lab
- Instrumentations
- Sub-assemblies

电气特性 Electrical Characteristics:

参数 Parameter	Min	Typ	Max	单位 Units
频率范围 Frequency Range	110		170	GHz
回波损耗 Return Loss			-10	dB
绝缘电阻 Insulation Resistance		5		GΩ

环境和机械特性 Envrionmental And Physical Characteristics:

参数 Parameter	指标 Value	单位 Units
操作温度 Operating Temerature	-40 To +125	℃
机械寿命 Mechanical Durability	100	cycles
同轴接口 Coax Connector	0.6mm Male	
波导 Waveguide	WR6.5/UG-387/U-M	

Suzhou Talent Microwave,Inc
sales@talentmw.com
www.talentmw.com

外形图 Outline Drawing:

Unit:mm; Tolerance:±0.1mm

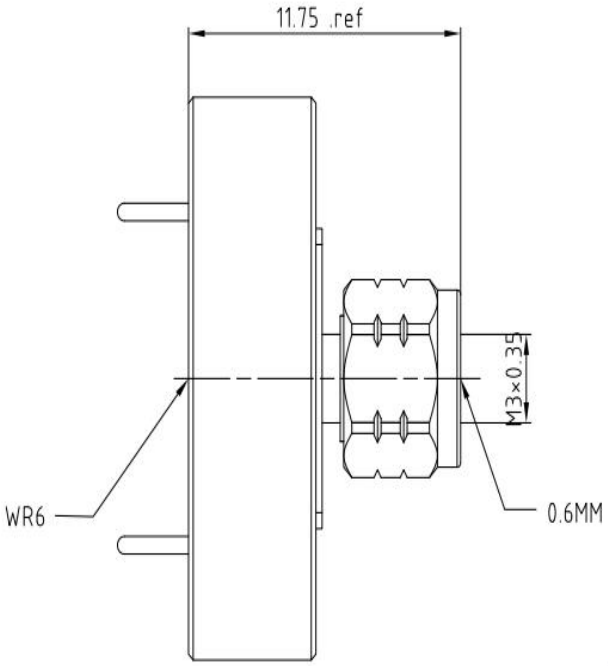

订货信息 Ordering Information:

标准型号 Base Number	描述 Description	版本号 Revision
TL-6WCA0.6ME	Waveguide to Coax Adapter, End Launch WR6.5/0.6mm Male,110-170GHz	Rev.1.1