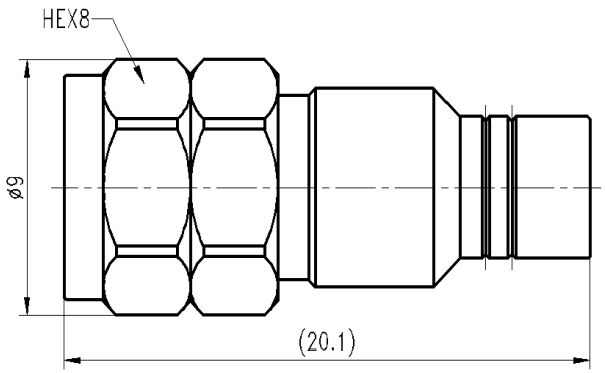

Electrical & Environmental Characteristics	
Impedance	50 Ohm
Insulation Resistance	5000 MΩ（DC100V）
Operating Frequency	10MHz-40GHz
Dielectric Withstanding Voltag	500V
VSWR	≤1.2
Insertion Loss	≤0.12*Sqt(f_GHz)
Operating Temperature	- 45~+125℃
Material & Coat-Plating	
Inner Conductor	Beryllium copper/Gold plated
Dielectric	PTFE
Body/Nut	Stainless steel/Passivated

THIS DRAWING IS A CONTROLLED DOCUMENT		DWN	Suzhou Talent Microwave,Inc
		CHK	
Unit mm	TOLERANCES UNLESS OTHERWISE SPECIFIED 0 PLC ±0.25 1 PLC ±0.15 2 PLC ±0.12 3 PLC ±- 3 PLC ±- ANGLES ±1°	APVD	Product Model
		PRODUCT SPEC	2.4-SMP-JJG 2.4 Male SMP Male Connector
		APPLICATON SPEC	
MATEIAL SEE TABLE	FINISH SEE TABLE	WEIGHT	GAGE CODE 0T8L4 / DRAWING NO
		CUSTOMER DRAWING	SCALE 4 / SCALE 4: 1 / SHEET1 OF 1 / RVE 1