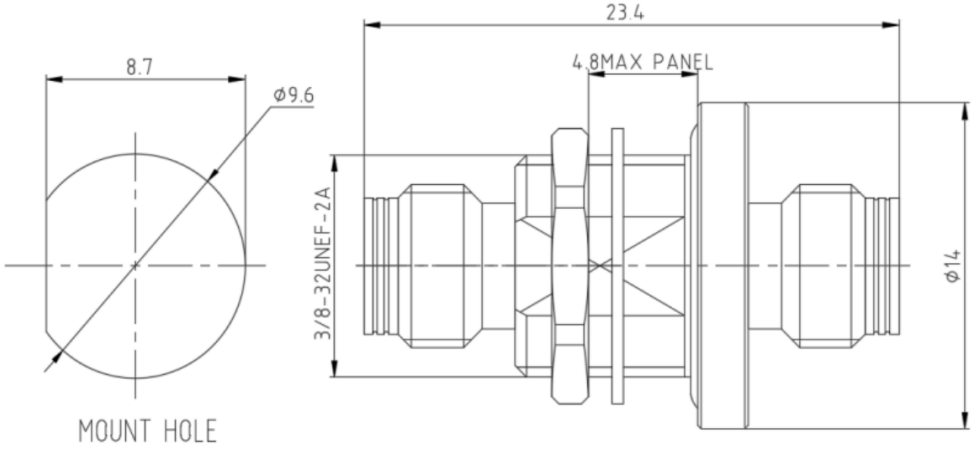

Material & Coat-Plating	
Inner Conductor	Beryllium Copper, AuroDur, gold plated
Dielectric	PEI
Outer contact	Stainless steel, Passivated
Gasket	Silicone
Hermetic bead	Glass
Hexagon nut	Stainless steel, Passivated
Tooth lock washer	Stainless steel, Passivated
Body	Brass,Gold, min. 0.20 µm, over nickel

Electrical & Environmental Characteristics	
Impedance	50 Ohm
Insulation Resistance	5000 MΩ
Operating Frequency	67 GHz
Dielectric Withstanding Voltage	750 V
VSWR	<1.5
Insertion Loss	0.05*Sqt(f_GHz)
Operating Temperature	10mK~+165℃
RF-leakage	100dB min up to 1GHz
Moisture resistance	MIL-STD-202, Meth. 106
Leakage rate	< 10^{-9} mbar x l/s
Pressure	2 N/mm2 max

THIS DRAWING IS A CONTROLLED DOCUMENT		DWN	Suzhou Talent Microwave,Inc			
		CHK				
Unit mm	TOLERANCES UNLESS OTHERWISE SPECIFIED 0 PLC ±0.25 1 PLC ±0.15 2 PLC ±0.12 3 PLC ±- 3 PLC ±- ANGLES ±1°	APVD	Product Mode 1.85-KYK-HS2 1.85mm Female to 1.85mmFemale , bulkhead, HERMETIC SEALED Adaptor			
		PRODUCT SPEC				
		APPLICATON SPEC				
MATEIAL SEE TABLE	FINISH SEE TABLE	WEIGHT	SIZE A4	GAGE CODE 0T8L4	DRAWING NO	
		CUSTOMER DRAWING	SCALE 4:	SCALE 4: 1	SHEET1 OF 1	RVE 1