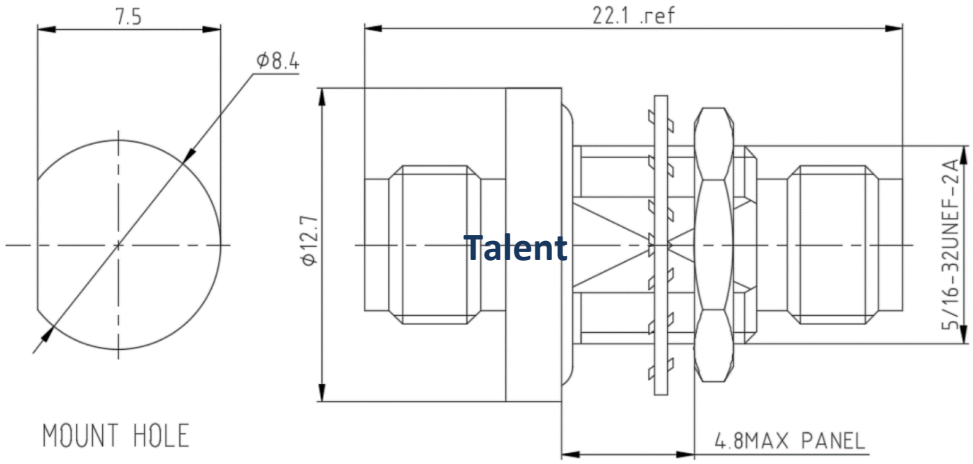

Material & Coat-Plating	
Inner Conductor	Beryllium Copper, AuroDur, gold plated
Dielectric	PTFE
Outer contact	Stainless Steel, gold plated
Gasket	Silicone
Glass seal	Glass
Internal tooth lock washer	Stainless steel

Electrical & Environmental Characteristics	
Impedance	50 Ohm
Insulation Resistance	5000 MΩ
Operating Frequency	18 GHz
Dielectric Withstanding Voltage	1000 V
VSWR	1.20
Insertion Loss	0.05*Sqt(f_GHz)
Operating Temperature	10mK~+165℃
RF-leakage	100dB min up to 1GHz
Moisture resistance	MIL-STD-202, Meth. 106
Leakage rate	< 10^{-9} mbar x l/s
Pressure	2 N/mm2 max

THIS DRAWING IS A CONTROLLED DOCUMENT		DWN	Suzhou Talent Microwave,Inc
		CHK	
Unit mm	TOLERANCES UNLESS OTHERWISE SPECIFIED 0 PLC ±0.25 1 PLC ±0.15 2 PLC ±0.12 3 PLC ±- 3 PLC ±- ANGLES ±1°	APVD	Product Mode
		PRODUCT SPEC	SMA-KYK-HS2 SMA Female to SMA Female , bulkhead, HERMETIC SEALED Adaptor
		APPLICATON SPEC	
MATEIAL SEE TABLE	FINISH SEE TABLE	WEIGHT	SIZE A4 / GAGE CODE 0T8L4 / DRAWING NO
		CUSTOMER DRAWING	SCALE 4: / SCALE 4: 1 / SHEET1 OF 1 / RVE 1