泰莱微波 Talent Microwave

Suzhou Talent Microwave,Inc
sales@talentmw.com
www.talentmw.com

7-Bit Digital Attenuator

0.125dB LSB/7 Bit/ 0.1-14GHz

Model: TLDA0.1G14G-15.875-7

The TLDA0.1G14G-15.875-7 is an broadband digitally controlled electrical attenuator operating from 0.1 to 14 GHz. The attenuator exhibits 8 dB typical insertion loss and offers 5 dB nominal attenuation control range in 0.125 dB steps under a 7-bit digital control. The control speed of the attenuator is typically 50 ns. The RF input and output ports are female SMA female coax connectors, and a male J30J-9ZKP port is employed for providing the control signal and DC bias.

Features:

- Ultra Wide Band: 0.1-14GHz
- 7-Bit, 0.125 dB LSB, 15.875 dB Range
- Low Insertion Loss
- High Attenuator Accuracy

Applications:

- Radar Systems
- Communication Systems
- Testing Equipment

电气特性 Electrical Characteristics:

参数 Parameter	Min	Typ	Max	单位 Units
频率范围 Frequency range		0.1-14		GHz
插损 Insertion Loss		5		dB
衰减范围 Attenuation Range		15.875		dB
控制位数 Control Bit TTL		7		Bit
衰减步进 Attenuation Step		0.125		dB
切换速度 Switch Speed		50		ns
输入驻波 Input VSWR		1.8		:1
输出驻波 Output VSWR		1.8		:1
最大输入功率 Input Max Power		24		dBm
直流电压 DC Voltage		+5		V DC
直流电流 DC Supply Current			50	mA
阻抗 Impedance		50		Ohms

Suzhou Talent Microwave,Inc
sales@talentmw.com
www.talentmw.com

机械特性 Mechanical Specifications:

描述 Description	参数 Parameter	单位 Units
输入/输出接口 Input /Output Connector	SMA Female/SMA Female	
DC控制接口 DC control interface	J30J-9ZKP	
尺寸 Size	27*24*11	mm
重量 Weight	/	g

绝对最大值 Absolute Maximum Ratings :

描述 Description	参数 Parameter	单位 Units
供电偏置电压 Supply Bias Voltage	+5（+5%）	V
射频输入功率 RF Input Power	24	dBm
ESD灵敏度 ESD sensitivity (HBm)	Class 0, passed 150V	

外形图 Outline Drawing:

Unit:mm

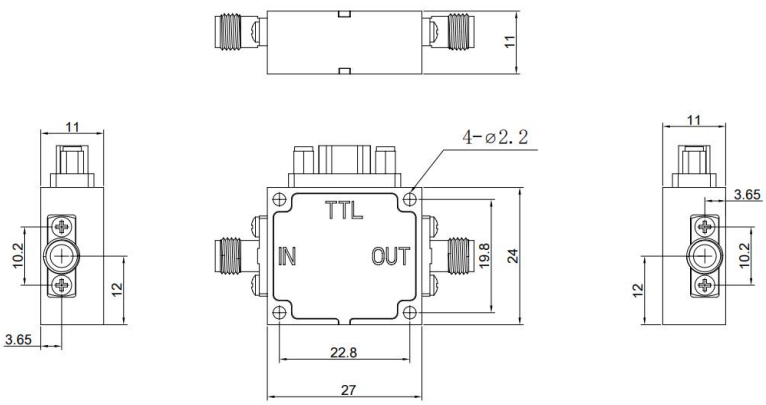

真值表 Truth Table							
TTL Control Input							Signal Path State
C1	C2	C3	C4	C5	C6	C7	
0	0	0	0	0	0	0	Reference
1	0	0	0	0	0	0	0.125
0	1	0	0	0	0	0	0.25
0	0	1	0	0	0	0	0.5
0	0	0	1	0	0	0	1
0	0	0	0	1	0	0	2
0	0	0	0	0	1	0	4
0	0	0	0	0	0	1	8
1	1	1	1	1	1	1	15.875



OBSERVE PRECAUTIONS
ELECTROSTATIC SENSITIVE
DEVICES

Suzhou Talent Microwave,Inc
sales@talentmw.com
www.talentmw.com

加电接口 Supply Conector(J30J-15ZKP):

J30J-9ZKP	
引脚Pin#	功能Function
1	+5V
2	C1
3	C2
4	C3
5	C4
6	GND
7	C5
8	C6
9	C7

温度环境 Environmental Conditions:

参数 Parameter	Min	Typ	Max	单位 Units
操作温度 Operating Temperature	-40		+70	℃
存储温度 Non-operating Temperature	-55		+85	℃
相对湿度 Relative humidity		95		%
海拔 Altitude	10,000			feet
震动 Shock / Vibration(MIL-STD-810F)	25g rms (15 degree 2KHz) endurance, 1 hour per axis			
冲击 Shock(non operating)	20G for 11msc half sin wave,3 axis both directions			

订货信息 Ordering Information:

标准型号 Base Number	描述 Desciption	版本号 Revision
TLDA0.1G14G-15.875-7	7-Bit Digital Digital Attenuator,0.1-14GHz,SMA Female	Rev.1.0