泰莱微波
Talent Microwave

Suzhou Talent Microwave,Inc
sales@talentmw.com
www.talentmw.com

F-Band Compact Waveguide Twist

WR-08/90-140GHz/Twist Bend/16.7mm

Model: TLTB-090140-8-B

TLTB-090140-8-B is a WR-08, 90°, compact waveguide twist with a UG-387/U-M flange on one end.The opposite end is compatible with a UG-387/U-M flange. The overall length of the twist is 16.7 mm. The waveguide twist is manufactured through a precision machining process to ensure high quality and ruggedness. The waveguide twist is offered to cover the frequency range of 90 to 140 GHz.

Features:

- Frequency Coverage: 90 to 140 GHz
- Rugged Waveguide Configuration
- Low Insertion Loss
- Compact Size

Applications:

- Test Instrumentation
- Sub-assemblies
- Lab Use

电气特性 Electrical Characteristics:

参数 Parameter	Min	Typ	Max	单位 Units
频率范围 Frequency range	90		140	GHz
插入损耗 Insertion Loss		0.3		dB
回波损耗 Return Loss		-20		dB
标准温度 Specification Temperature		25		℃

机械特性 Mechanical Specifications:

参数 Parameter	指标 Value	单位 Units
工作温度 Operating Temperature	-40~+85	℃
波导接口 Waveguide Connector	WR-08/UG-387/U-M	
扭转角 Twist Angle	90	°
材料 Material	Brass	
尺寸 Size	20*20*16.7	mm

Suzhou Talent Microwave,Inc
sales@talentmw.com
www.talentmw.com

外形图 Outline Drawing:

Unit:mm; Tolerance:±0.1mm

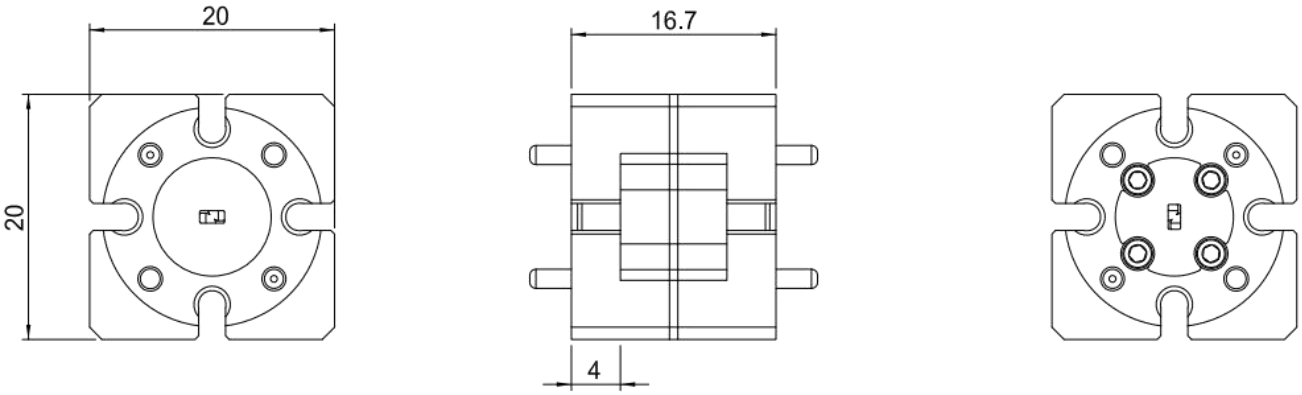

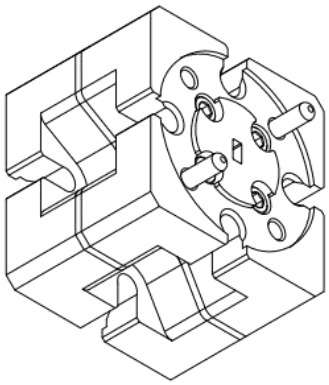

ESD Protection: Strictly adhere to ESD precautions to prevent electrostatic damage.

订货信息 Ordering Information:

标准型号 Base Number	描述 Description	版本号 Revision
TLTB-090140-8-B	90-140GHz Compact Waveguide Twist WR-08,Twist Bend	Rev.1.1

Suzhou Talent Microwave,Inc
sales@talentmw.com
www.talentmw.com

典型曲线 Typical Performance Data:

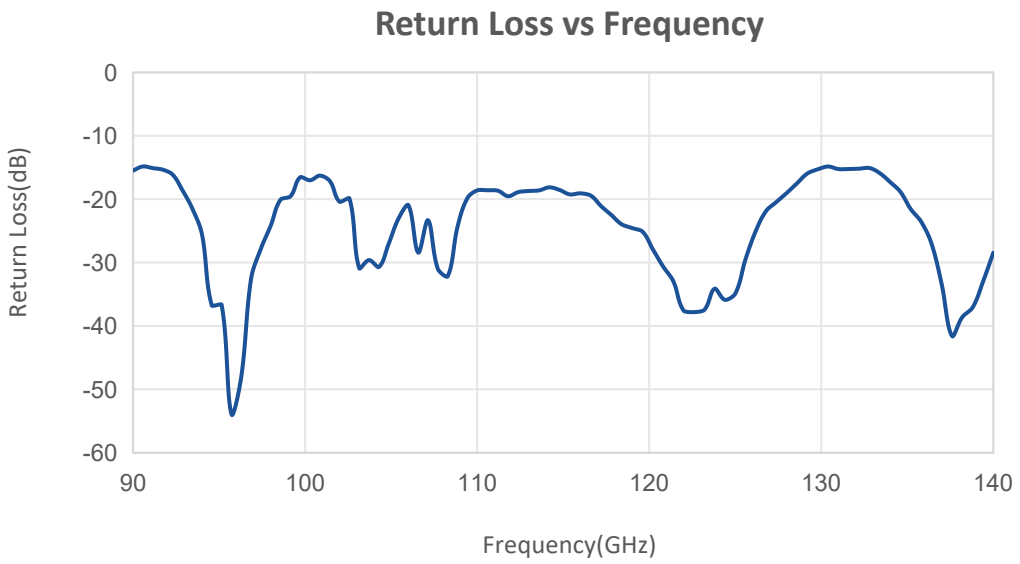

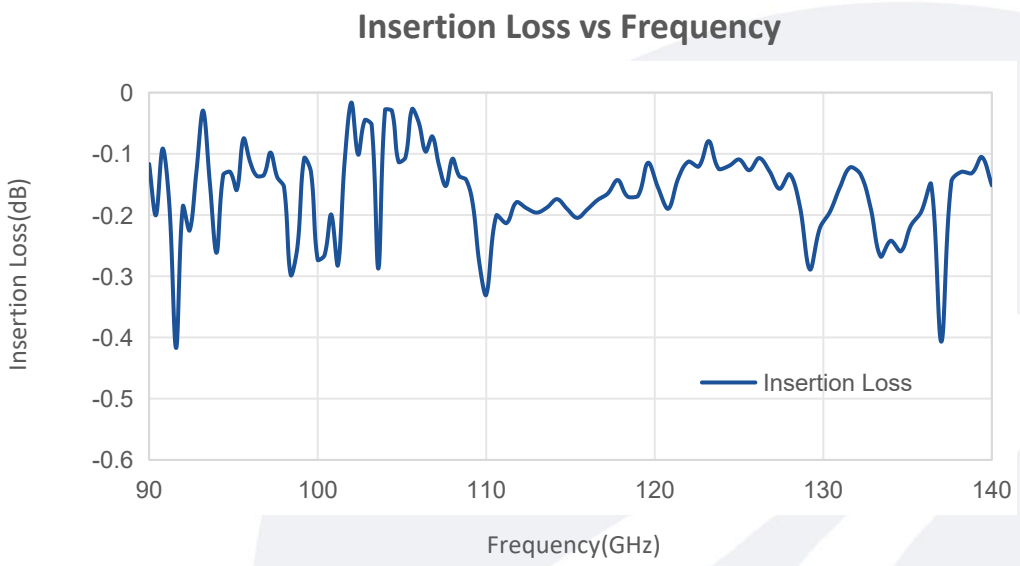

Note: Above data is for ref only, actual data may vary from unit to unit depending on operating environment and other factors like material lots etc.