泰莱微波 Talent Microwave

Suzhou Talent Microwave,Inc
sales@talentmw.com
www.talentmw.com

Waveguide Lowpass Filter

WR-6.5/110-140GHz

Model: TLLF-110140-40

TLLF-110140-40 is a waveguide lowpass filter with a passband frequency from 110 to 140 GHz and a rejection frequency from 148 to 170 GHz. The nominal insertion loss of the filter is 1.6 dB and the typical rejection is 40 dB.

Features:

- Passband Frequency Range 110 to 140GHz
- Ful Band Operation
- Low Insertion Loss
- High Rejection

Applications:

- Test Labs
- Instrumentations
- Sub-assemblies

电气特性 Electrical Characteristics:

参数 Parameter		Min	Typ	Max	单位 Units
通带频率范围 Passband Frequency range		110		140	GHz
通带插损 Passband Insertion Loss				1.6	dB
带外抑制 Rejection	@148-170GHz	40			dB
	@145GHz	20			
回波损耗 Return Loss			-20	-16	dB

环境和机械特性 Envrionmental And Physical Characteristics:

参数 Parameter	指标 Value	单位 Units
操作温度 Operating Temerature	-40 to +85	℃
存储温度 Storage Temerature	-40 to +85	℃
波导 Waveguide	WR-6.5/UG-387/U-M	
尺寸 Size	50.8*⌀19.1	mm

Suzhou Talent Microwave,Inc
sales@talentmw.com
www.talentmw.com

外形图 Outline Drawing:

Unit:mm; Tolerance:±0.1mm

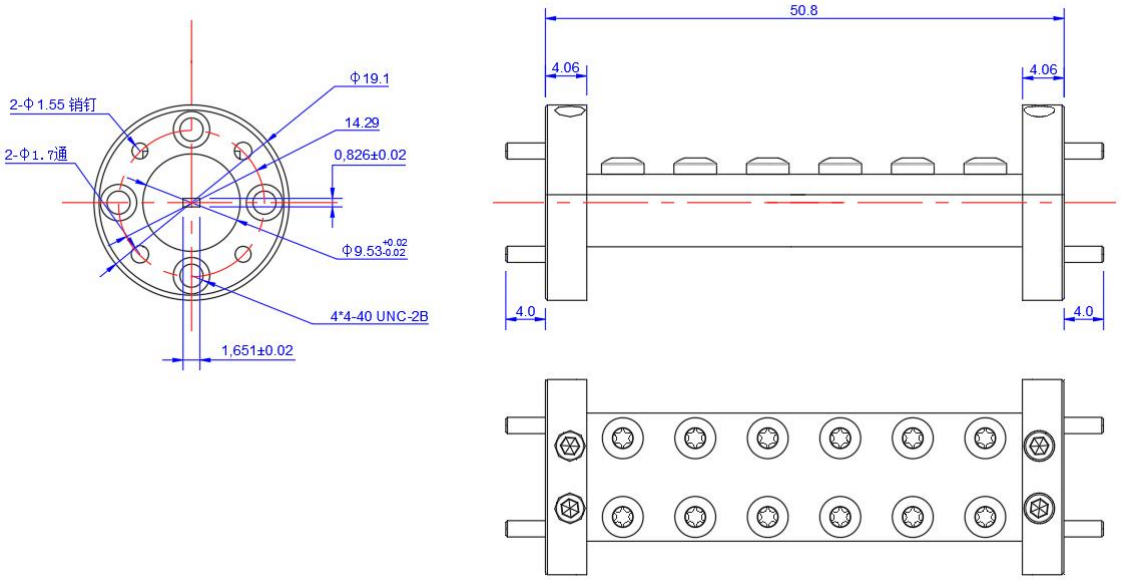

ESD Protection: Strictly adhere to ESD precautions to prevent electrostatic damage.

订货信息 Ordering Information:

标准型号 Base Number	描述 Description	版本号 Revision
TLLF-110140-40	Waveguide Lowpass Filter,110-140GHz,Insertion Loss:1.6dB, Rejection:≥40dB@148-170GHz,WR-6.5/UG-387/U-M	Rev.1.1