泰莱微波 Talent Microwave

Suzhou Talent Microwave,Inc
sales@talentmw.com
www.talentmw.com

Waveguide Bandpass Filter

WR-10/83-110GHz

Model: TLBF-83110-30

TLBF-83110-30 is a waveguide bandpass filter with a passband frequency from 83 to 110 GHz and a rejection frequency from 79 to 81 GHz. The nominal insertion loss of the filter is 2.0 dB and the minimum rejection is 30 dB.

Features:

- Passband Frequency Range 83 to 110 GHz
- Lower Cost
- Low Insertion Loss
- High Rejection

Applications:

- Communicatin Systems
- Radar Systems
- Sub-assemblies

电气特性 Electrical Characteristics:

参数 Parameter		Min	Typ	Max	单位 Units
通带频率范围 Passband Frequency range		83		110	GHz
通带带宽 Passband Width			27		GHz
回波损耗 Return Loss			-18	-15	dB
通带插损 Passband Insertion Loss			1	2	dB
带外抑制 Rejection	@79-81GHz	30			dB
	@DC-79GHz	60			

环境和机械特性 Envrionmental And Physical Characteristics:

参数 Parameter	指标 Value	单位 Units
操作温度 Operating Temerature	-40 to +85	℃
存储温度 Storage Temerature	-40 to +85	℃
材质 Material	Aluminium	
表面处理 Finish	Comductive oxidation	
波导 Waveguide	WR-10/UG-387/U-M	
长度 Length	38.1	mm

Suzhou Talent Microwave,Inc
sales@talentmw.com
www.talentmw.com

外形图 Outline Drawing:

Unit:mm; Tolerance:±0.1mm

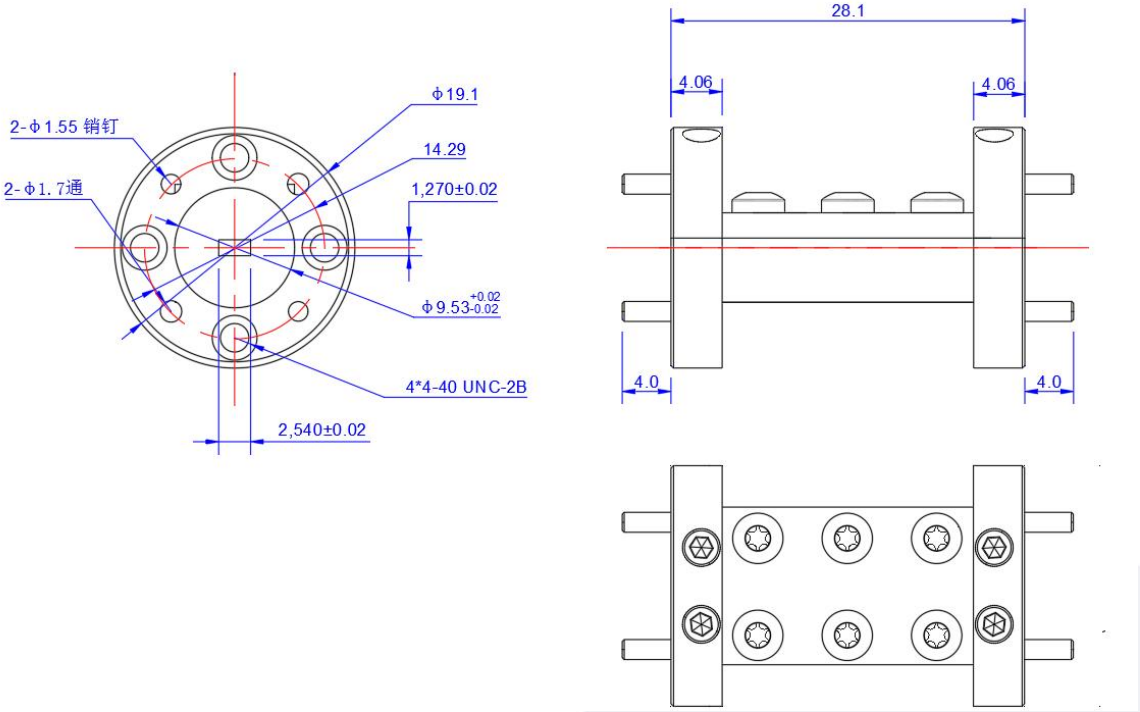

ESD Protection: Strictly adhere to ESD precautions to prevent electrostatic damage.

订货信息 Ordering Information:

标准型号 Base Number	描述 Description	版本号 Revision
TLBF-83110-30	Waveguide Bandpass Filter,83-110GHz,Insertion Loss:1.0dB, Rejection:30dB@79-81GHz,WR-10/UG-387/U-M	Rev.1.1