泰莱微波 Talent Microwave

Suzhou Talent Microwave,Inc
sales@talentmw.com
www.talentmw.com

Waveguide Bandpass Filter

WR-10/75-85GHz

Model: TLBF-7585-30

TLBF-7585-30 is a waveguide bandpass filter with a passband frequency from 75 to 85 GHz and a rejection frequency from 71 to 73 GHz & 87 to 89 GHz. The nominal insertion loss of the filter is 1.5 dB and the minimum rejection is 30 dB.

Features:

- Passband Frequency Range 75 to 85 GHz
- Lower Cost
- Low Insertion Loss
- High Rejection

Applications:

- Communicatin Systems
- Radar Systems
- Sub-assemblies

电气特性 Electrical Characteristics:

参数 Parameter		20	Typ	Max	单位 Units
通带频率范围 Passband Frequency range		75		85	GHz
通带带宽 Passband Width			10		GHz
回波损耗 Return Loss				-15	dB
通带插损 Passband Insertion Loss			1.5	2.5	dB
带外抑制 Rejection	@71-73GHz	30			dB
	@87-89GHz	30			
	@DC-71GHz	60			
	@89-140GHz	60			
	@140-160GHz	20			

环境和机械特性 Envrionmental And Physical Characteristics:

参数 Parameter	指标 Value	单位 Units
操作温度 Operating Temerature	-40 to +85	℃
波导 Waveguide	WR-10/UG-387/U-M	
尺寸 Size	ø19.1*38.1	mm

泰莱微波
Talent Microwave

Suzhou Talent Microwave,Inc
sales@talentmw.com
www.talentmw.com

外形图 Outline Drawing:

Unit:mm; Tolerance:±0.1mm

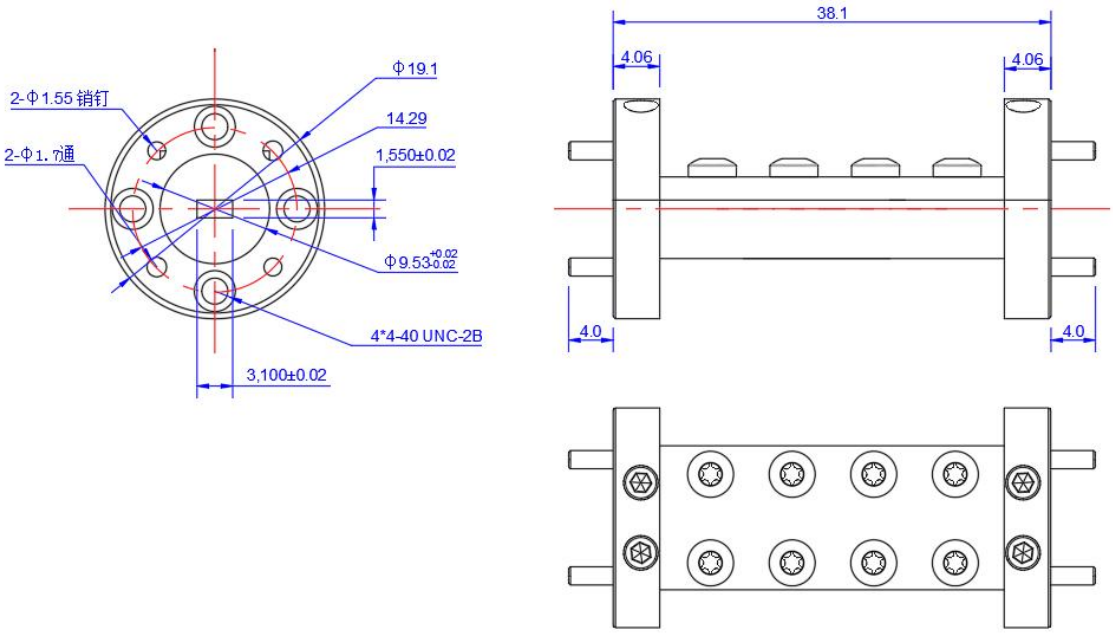

ESD Protection: Strictly adhere to ESD precautions to prevent electrostatic damage.

订货信息 Ordering Information:

标准型号 Base Number	描述 Description	版本号 Revision
TLBF-7585-30	Waveguide Bandpass Filter,75-85GHz,Insertion Loss:1.5dB, Rejection:30dB@71-73GHz&87-89GHz,WR-10/UG-387/U-M	Rev.1.0