泰莱微波 Talent Microwave

Suzhou Talent Microwave,Inc
sales@talentmw.com
www.talentmw.com

Waveguide Bandpass Filter

WR-12/67-71GHz

Model: TLBF-6971-40

TLBF-6971-40 is a waveguide bandpass filter with a passband frequency from 69 to 71 GHz and a rejection frequency from DC to 65 GHz & 73 to 95 GHz. The nominal insertion loss of the filter is 1.5 dB and the minimum rejection is 40 dB.

Features:

- Passband Frequency Range 69 to 71 GHz
- Lower Cost
- Low Insertion Loss
- High Rejection

Applications:

- Communicatin Systems
- Radar Systems
- Sub-assemblies

电气特性 Electrical Characteristics:

参数 Parameter		Min	Typ	Max	单位 Units
通带频率范围 Passband Frequency range		69		71	GHz
通带带宽 Passband Width			2		GHz
回波损耗 Return Loss			-20	-16	dB
通带插损 Passband Insertion Loss			1	1.5	dB
带外抑制 Rejection	@DC-65GHz	40			dB
	@73-95GHz	40			

环境和机械特性 Envrionmental And Physical Characteristics:

参数 Parameter	指标 Value	单位 Units
操作温度 Operating Temerature	-40 to +85	℃
波导 Waveguide	WR-12/UG-387/U-M	

Suzhou Talent Microwave,Inc
sales@talentmw.com
www.talentmw.com

外形图 Outline Drawing:

Unit:mm; Tolerance:±0.1mm

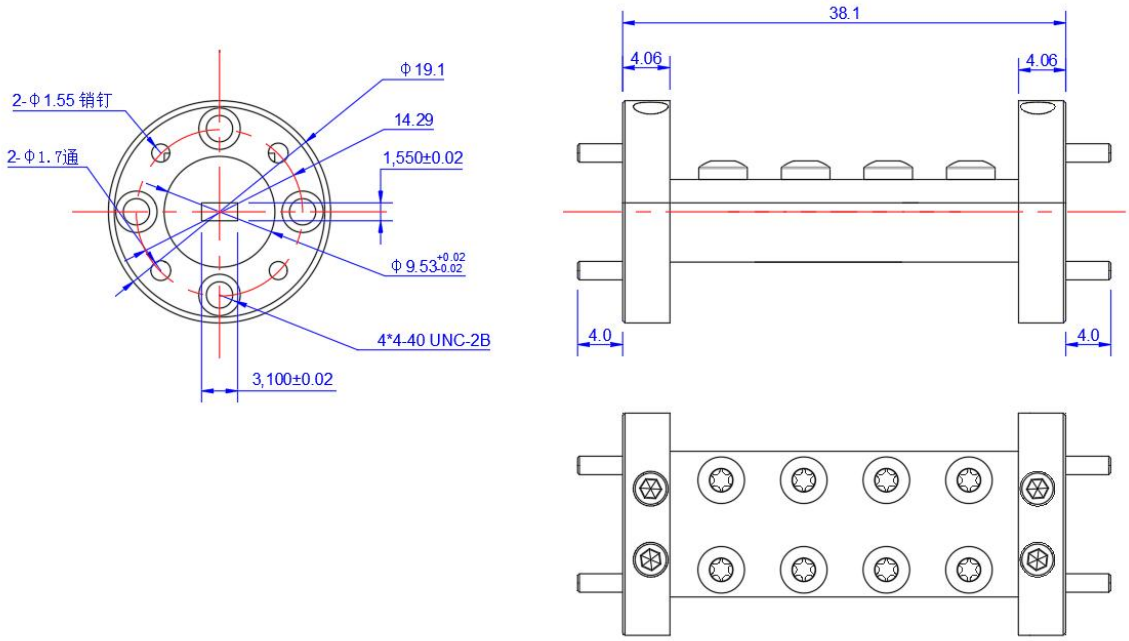

ESD Protection: Strictly adhere to ESD precautions to prevent electrostatic damage.

订货信息 Ordering Information:

标准型号 Base Number	描述 Description	版本号 Revision
TLBF-6971-40	Waveguide Bandpass Filter,69-71GHz,Insertion Loss:1.0dB, Rejection:40dB@DC-65GHz&73-95GHz,WR-12/UG-387/U-M	Rev.1.1