泰莱微波 Talent Microwave

Suzhou Talent Microwave,Inc
sales@talentmw.com
www.talentmw.com

Waveguide Bandpass Filter

WR-12/56-83GHz

Model: TLBF-5683-20

TLBF-5683-20 is a waveguide bandpass filter with a passband frequency from 56 to 83 GHz and a rejection frequency from 46 to 54 GHz & 85 to 87 GHz. The nominal insertion loss of the filter is 2.0 dB and the minimum rejection is 20 dB.

Features:

- Passband Frequency Range 56 to 83 GHz
- Lower Cost
- Low Insertion Loss
- High Rejection

Applications:

- Communicatin Systems
- Radar Systems
- Sub-assemblies

电气特性 Electrical Characteristics:

参数 Parameter		Min	Typ	Max	单位 Units
通带频率范围 Passband Frequency range		56		83	GHz
通带带宽 Passband Width			27		GHz
回波损耗 Return Loss			-18	-15	dB
通带插损 Passband Insertion Loss			1	2	dB
带外抑制 Rejection	@46-54GHz	20			dB
	@85-87GHz	20			
	@DC-46GHz	60			
	@87-114GHz	60			

环境和机械特性 Envrionmental And Physical Characteristics:

参数 Parameter	指标 Value	单位 Units
操作温度 Operating Temerature	-40 to +85	℃
存储温度 Storage Temerature	-40 to +85	℃
材质 Material	Aluminium	
表面处理 Finish	Conductive oxidation	
波导 Waveguide	WR-12/UG-387/U-M	
长度 Length	38.1	mm

Suzhou Talent Microwave,Inc
sales@talentmw.com
www.talentmw.com

外形图 Outline Drawing:

Unit:mm; Tolerance:±0.1mm

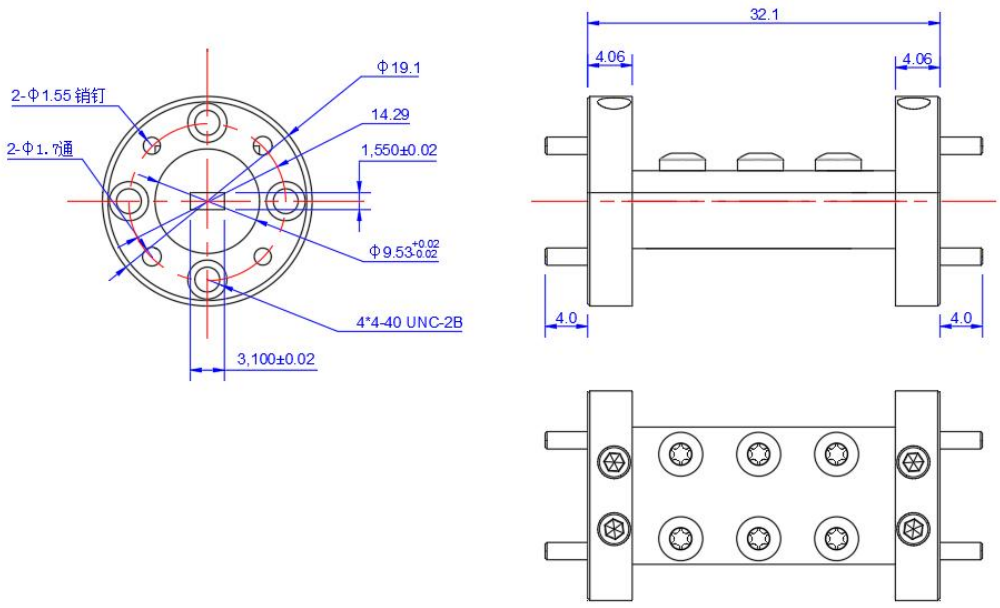

ESD Protection: Strictly adhere to ESD precautions to prevent electrostatic damage.

订货信息 Ordering Information:

标准型号 Base Number	描述 Description	版本号 Revision
TLBF-5683-20	Waveguide Bandpass Filter,56-83GHz,Insertion Loss:1.0dB, Rejection:20dB@46-54GHz & 85-87GHz,WR-12/UG-387/U-M	Rev.1.1