泰莱微波
Talent Microwave

Suzhou Talent Microwave,Inc
sales@talentmw.com
www.talentmw.com

3dB Coaxial 90 Degree Hybrid Coupler

2-40GHz/90-Degrees

Model: TBG-20400-3SMP-90

The TBG-20400-3SMP-90 is a coaxial 90 degree hybrid coupler that operates over a 2 to 40GHz bandwidth, with typical 3 dB coupling and typical 2.8dB insertion loss. The minimum port to port isolation for the coupler is 10dB. The input and output port configuration offers coax adapter structure with SMP female.

Features:

- Frequency range: 2-40GHz
- Insertion Loss: 2.8dB Typ
- Coupling: 3dB Typ
- Designed for Optimal Phase/Amplitude Balance

Applications:

- Communication systems
- Lab Test
- Instrumentations

电气特性 Electrical Characteristics:

参数 Parameter	Min	Typ	Max	单位 Units
频率范围 Frequency range	2		40	GHz
插损 Insertion Loss		2.8		dB
耦合度 Coupling		3		dB
隔离度 Isolation	10			dB
幅度平衡 Amplitude Balance			±1.6	dB
相位平衡 Phase Balance			±14	°
驻波 VSWR		2.0		:1
耐功率 Power Handling			20	W
阻抗 Impedance		50		Ohms

机械特性 Mechanical Specifications:

参数 Parameter	指标 Value	单位 Units
操作温度 Operating Temerature	-45 To +85	℃
相对湿度 Relative Humidity	0~90	%
输入/输出接口 Input /Output Connector	SMP Male/SMP Male	
尺寸 Size	38*33*12.7	mm

Suzhou Talent Microwave,Inc
sales@talentmw.com
www.talentmw.com

外形图 Outline Drawing:

Unit:mm(inch)

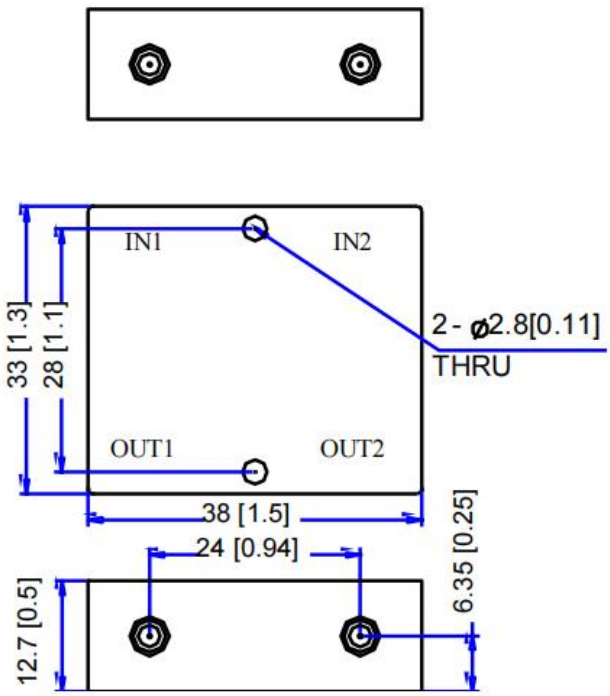



ESD Protection: Strictly adhere to ESD precautions to prevent electrostatic damage.

订货信息 Ordering Information:

标准型号 Base Number	描述 Description	版本号 Revision
TBG-20400-3SMP-90	3dB Coaxial 90 Degree Hybrid Coupler, 2-40GHz, SMP Male	Rev.1.0