泰莱微波 Talent Microwave

Suzhou Talent Microwave,Inc
sales@talentmw.com
www.talentmw.com

Equalizer

DC-12GHz/1.8dB, Slope

Model: TLME-DC12G-1.8

The TLME-DC12G-1.8 is an equalizer. It is a positive gain slope equalizer designed to pass DC to 12 GHz. Equalization can be applied to reduce low pass filtering effects in both RF/microwave and high speed digital systems.

Features:

- Frequency range: DC-12 GHz
- Good gain equalization
- Small Size and simple to use
- Excellent return loss

Applications:

- Cable or Waveguide Loss Compensation
- Amplifier Flatness Compensation
- Microwave Radio
- RF Transceivers
- Telecom Infrastructure

电气特性 Electrical Characteristics:

参数 Parameter	Min	Typ	Max	单位 Units
频率范围 Frequency range	DC		12	GHz
插损 Insertion Loss@12GHz		0.6		dB
均衡量 Slope		1.8		dB
回波损耗 Return Loss		-25		dB
耐受功率 Power Handling		30		dBm
阻抗 Impedance		50		Ohms

机械特性 Mechanical Specifications:

参数 Parameter	指标 Value	单位 Units
输入/输出接口 Input /Output Connector	2.92mm Male/2.92mm Female	
长度 Length	42.2	mm

Suzhou Talent Microwave,Inc
sales@talentmw.com
www.talentmw.com

外形图 Outline Drawing:

Unit:mm; Tolerance:±0.1mm

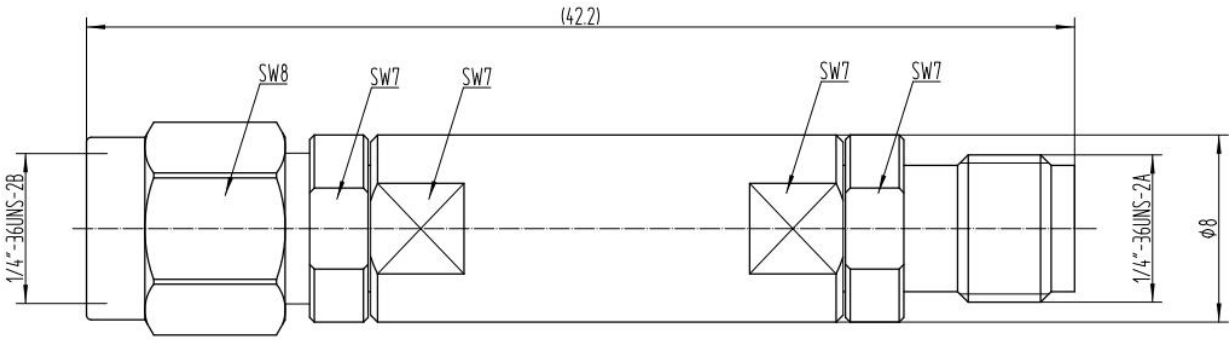



ESD Protection: Strictly adhere to ESD precautions to prevent electrostatic damage.

温度环境 Environmental Conditions:

参数 Parameter	Min	Typ	Max	单位 Units
操作温度 Operating Temperature	-40		+70	℃
存储温度 Non-operating Temperature	-55		+85	℃
相对湿度 Relative humidity		95		%
海拔 Altitude	10,000			feet
震动 Shock / Vibration(MIL-STD-810F)	25g rms (15 degree 2KHz) endurance, 1 hour per axis			
冲击 Shock(non operating)	20G for 11msc half sin wave,3 axis both directions			

订货信息 Ordering Information:

标准型号 Base Number	描述 Description	版本号 Revision
TLME-DC12G-1.8	Equalizer, DC-12GHz, Insertion loss: 0.6dB@12GHz; 2.92mm Male to 2.92mm Female	Rev.1.1

Suzhou Talent Microwave,Inc
sales@talentmw.com
www.talentmw.com

典型曲线 Typical Performance Data:

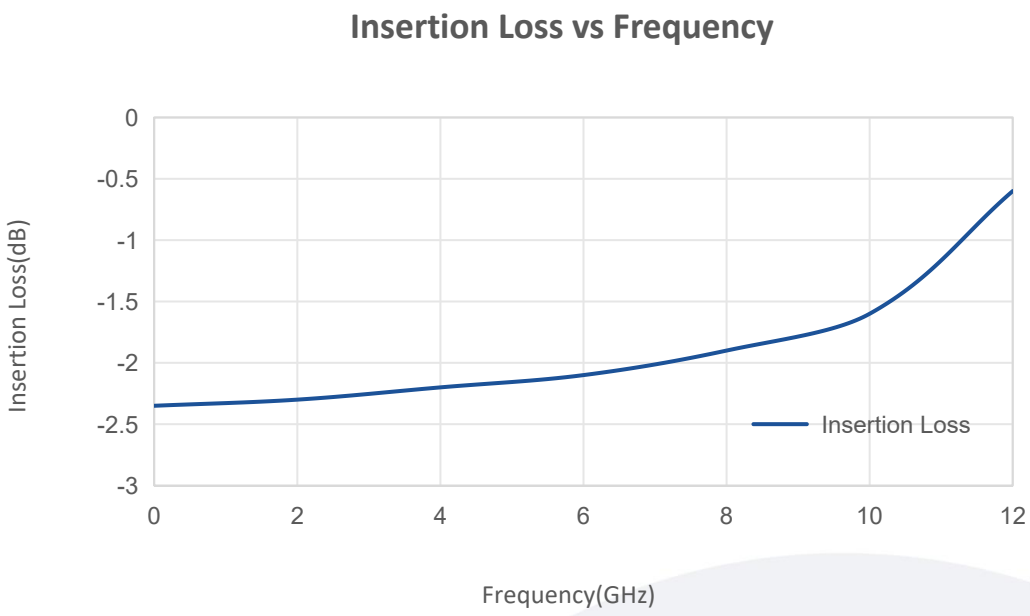

Note: Above data is for ref only, actual data may vary from unit to unit depending on operating environment and other factors like material lots etc.