泰莱微波
Talent Microwave

Suzhou Talent Microwave,Inc
sales@talentmw.com
www.talentmw.com

# Equalizer

## DC-4GHz/3dB, Slope

## Model: TLME-DC4G-3

The TLME-DC4G-3 is an equalizer. It is a positive gain slope equalizer designed to pass DC to 4 GHz. Equalization can be applied to reduce low pass filtering effects in both RF/microwave and high speed digital systems.

### Features:

- Frequency range: DC-4 GHz
- Good gain equalization
- Small Size and simple to use
- Excellent return loss

### Applications:

- Cable or Waveguide Loss Compensation
- Amplifier Flatness Compensation
- Microwave Radio
- RF Transceivers
- Telecom Infrastructure

### 电气特性 Electrical Characteristics:

| 参数 Parameter | Min | Typ | Max | 单位 Units |
|---|---|---|---|---|
| 频率范围 Frequency range | DC | | 4 | GHz |
| 插损 Insertion Loss@4GHz | | 0.6 | | dB |
| 均衡量 Slope | | 3 | | dB |
| 回波损耗 Return Loss | | -18 | | dB |
| 耐受功率 Power Handling | | 30 | | dBm |
| 阻抗 Impedance | | 50 | | Ohms |

### 机械特性 Mechanical Specifications:

| 参数 Parameter | 指标 Value | 单位 Units |
|---|---|---|
| 输入/输出接口 Input /Output Connector | 2.92mm Male/2.92mm Female | |
| 长度 Length | 42.2 | mm |

Suzhou Talent Microwave,Inc
sales@talentmw.com
www.talentmw.com

## 外形图 Outline Drawing:

Unit:mm; Tolerance:±0.1mm

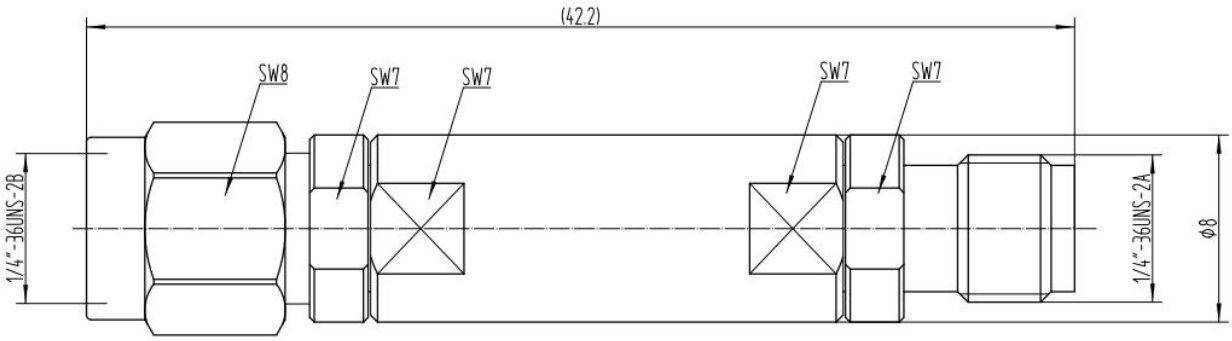


ESD Protection: Strictly adhere to ESD precautions to prevent electrostatic damage.

## 温度环境 Environmental Conditions:

| 参数 Parameter | Min | Typ | Max | 单位 Units |
|---|---|---|---|---|
| 操作温度 Operating Temperature | -40 | | +70 | ℃ |
| 存储温度 Non-operating Temperature | -55 | | +85 | ℃ |
| 相对湿度 Relative humidity | | 95 | | % |
| 海拔 Altitude | 10,000 | | | feet |
| 震动 Shock / Vibration(MIL-STD-810F) | 25g rms (15 degree 2KHz) endurance, 1 hour per axis | | | |
| 冲击 Shock(non operating) | 20G for 11msc half sin wave,3 axis both directions | | | |

## 订货信息 Ordering Information:

| 标准型号 Base Number | 描述 Description | 版本号 Revision |
|---|---|---|
| TLME-DC4G-3 | Equalizer, DC-4GHz, Insertion loss: 0.6dB@4GHz; 2.92mm Male to 2.92mm Female | Rev.1.1 |

Suzhou Talent Microwave,Inc
sales@talentmw.com
www.talentmw.com

## 典型曲线 Typical Performance Data:

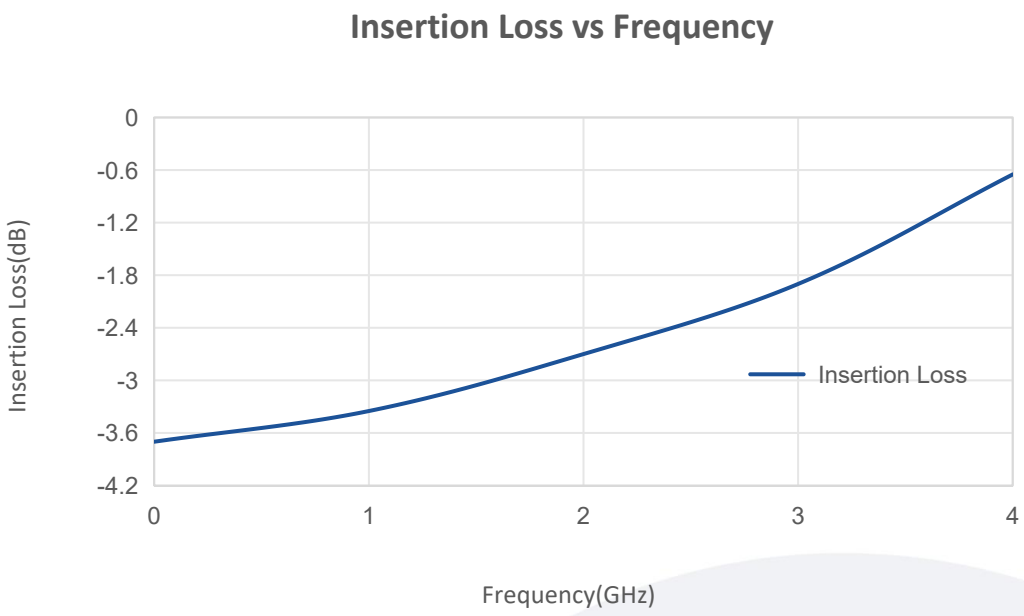


Note: Above data is for ref only, actual data may vary from unit to unit depending on operating environment and other factors like material lots etc.