泰莱微波 Talent Microwave

Suzhou Talent Microwave,Inc
sales@talentmw.com
www.talentmw.com

# High Power Dual-Directional Coupler

## 100KHz-1GHz/40dB Coupling/N Female  Model: TDC-100K01-40N-200

TDC-100K01-40N-200 is a high power dual-directional coupler that delivers a 40 dB nominal coupling level and 13 dB minimum directivity across the full frequency range from 100KHz to1GHz. It is a four-port passive device that can couple a portion of the power from the main transmission line to the auxiliary line in a directional manner.

### Features:

- Output Frequency: 100KHz-1GHz
- Max Power: 200W
- Stackable mechanical design
- Low Insertion Loss
- Moderate Directivity
- 50 Ohm Matched Input / Output

### Applications:

- Test Labs
- Instrumentations
- Sub-assemblies

### 电气特性 Electrical Characteristics:

| 参数 Parameter | | Min | Typ | Max | 单位 Units |
|---|---|---|---|---|---|
| 工作频率 Frequency Range | | 100KHz | | 1GHz | |
| 插入损耗 Insertion Loss(Excl coupling) | | | | 1.0 | dB |
| 耦合度 Coupling | | | 40±1.2 | | dB |
| 方向性 Directivity | @100KHz-1MHz | 13 | | | dB |
| | @1MHz-1GHz | 18 | | | dB |
| 主线驻波 Main Line VSWR | | | | 1.25 | :1 |
| 耐功率 Power Handling | | | | 200 | W |
| 阻抗 Impedance | | | 50 | | Ohms |

### 机械特性 Mechanical Specifications:

| 参数 Parameter | 指标 Value | 单位 Units |
|---|---|---|
| 操作温度 Operating Temperature | -20 to +60 | ℃ |
| RF接口 RF Connector | N Female | |
| 耦合接口 Coupling Connector | N Female | |
| 尺寸 Size | 156.92*86.1*43.3 | mm |

泰莱微波
Talent Microwave

Suzhou Talent Microwave,Inc
sales@talentmw.com
www.talentmw.com

## 外形图 Outline Drawing:

Unit:mm

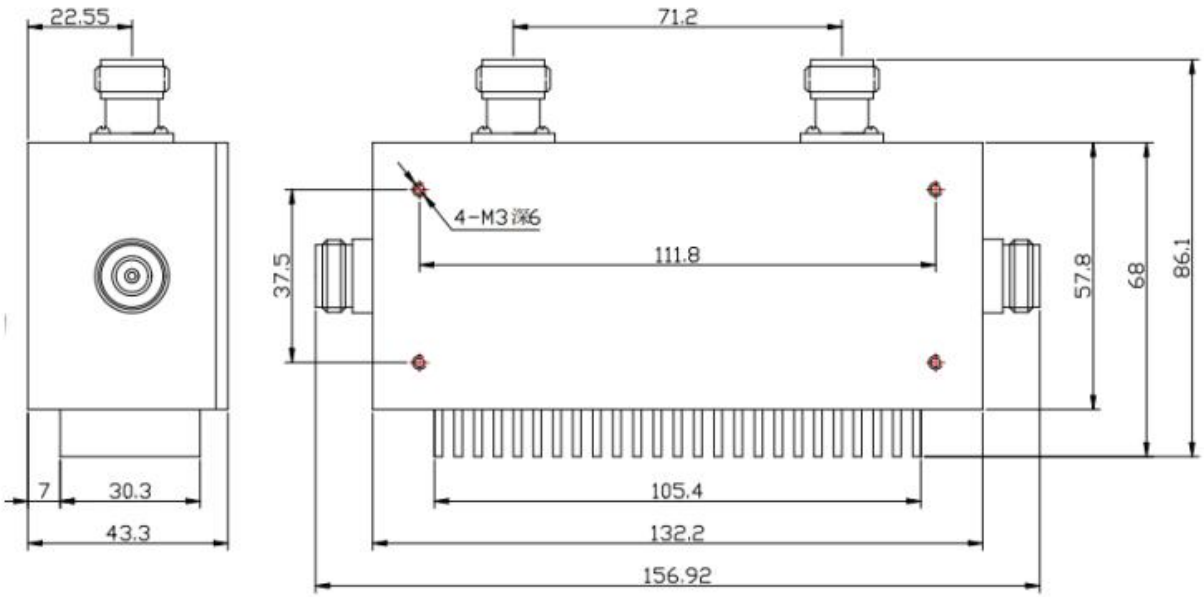


ESD Protection: Strictly adhere to ESD precautions to prevent electrostatic damage.

## 订货信息 Ordering Information:

| 标准型号 Base Number | 描述 Description | 版本号 Revision |
|---|---|---|
| TDC-100K01-40N-200 | High Power Dual-Directional Coupler<br>100KHz-1GHz, Coulping:40dB, N Female | Rev.1.0 |