泰莱微波 Talent Microwave

Suzhou Talent Microwave,Inc
sales@talentmw.com
www.talentmw.com

Low Noise Amplifier

0.1-50GHz/4.5dB NF/12dB Gain/10dBm P1dB Model: TLLA0.1G50G-12-45

TLLA0.1G50G-12-45 is a low noise amplifier with a typical small signal gain of 12 dB and a nominal noise figure of 4.5 dB across the frequency range of 0.1 to 50 GHz. The DC power requirement for the amplifier is +8 V DC/80 mA. The input and output port configuration offers coax adapter structure with 2.4mm female.

Features:

- Frequency range: 0.1-50GHz
- Gain: 12dB Typ
- Noise Figure: 4.5dB Typ
- Good Power and Gain Flatness
- 50 Ohm Matched Input / Output

Applications:

- Communication systems

电气特性 Electrical Characteristics:

参数 Parameter	Min	Typ	Max	单位 Units
频率范围 Frequency range	0.1		50	GHz
小信号增益 Small Signal Gain	10	12		dB
增益平坦度 Gain Flatness		±2.5		dB
噪声系数 Noise Figure		4.5	7	dB
线性输出功率 Output P1dB	8	10		dBm
饱和输出功率 Output Psat		12		dBm
输入驻波 Input VSWR		1.8	2.5	:1
输出驻波 Output VSWR		1.8	2.5	:1
直流电压 DC Voltage	+5	+8	+10	V DC
直流电流 DC Supply Current		80		mA
阻抗 Impedance		50		Ohms

*Performance may degrade below 300 MHz. Please refer to below typical test plots

机械特性 Mechanical Specifications:

参数 Parameter	指标 Value	单位 Units
输入/输出接口 Input /Output Connector	2.4mm Female/2.4mm Female	
直流偏置 DC Bias	Solder Pin	
尺寸 Size	40*35*12	mm

Suzhou Talent Microwave,Inc
sales@talentmw.com
www.talentmw.com

绝对最大值 Absolute Maximum Ratings:

参数 Parameter	指标 Value
供电偏置电压 Supply Bias Voltage	+12 V
输入功率 RF Input Power	+5 dBm
ESD灵敏度 ESD sensitivity (HBm)	Class 0, passed 150V



Simple 220V System
Available SAC option

外形图 Outline Drawing:

Unit:mm; Tolerance:±0.1mm

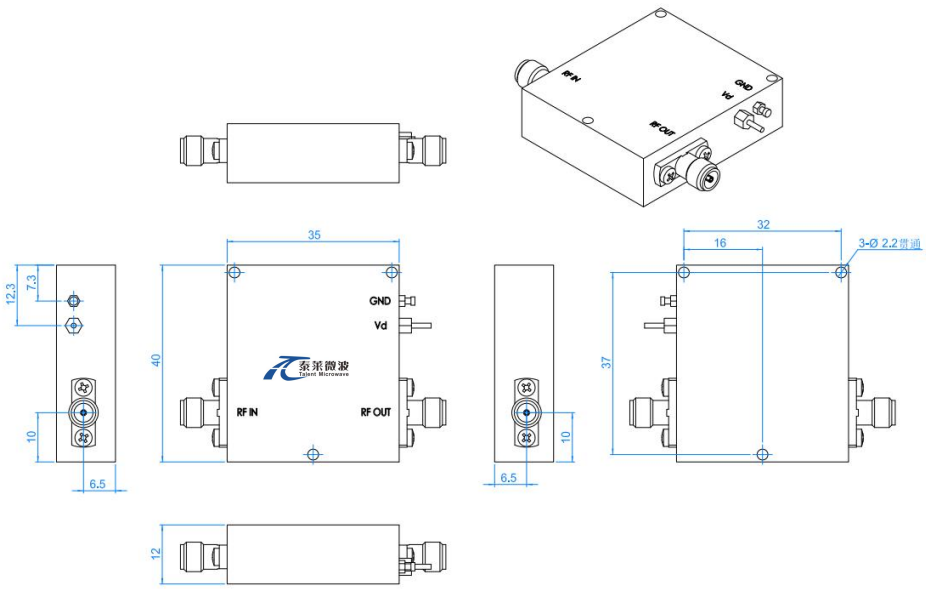

***Heat Sink Required During Operation

ESD Protection: Strictly adhere to ESD precautions to prevent electrostatic damage.

温度环境 Environmental Conditions:

参数 Parameter	Min	Typ	Max	单位 Units
操作温度 Operating Temperature	-45		+85	℃
存储温度 Non-operating Temperature	-55		+125	℃
相对湿度 Relative humidity		95		%
海拔 Altitude	10,000			feet
震动 Shock / Vibration(MIL-STD-810F)	25g rms (15 degree 2KHz) endurance, 1 hour per axis			
冲击 Shock(non operating)	20G for 11msc half sin wave,3 axis both directions			

Suzhou Talent Microwave,Inc
sales@talentmw.com
www.talentmw.com

订货信息 Ordering Information:

标准型号 Base Number	描述 Description	版本号 Revision
TLLA0.1G50G-12-45	Low Noise Amplifier, 0.1-50GHz, Noise Figure:4.5dB, Gain:12 dB,P1dB:10dBm,+8V DC,Without Heatsink	Rev.1.1
TLLA0.1G50G-12-45-HS	Low Noise Amplifier, 0.1-50GHz, Noise Figure:4.5dB, Gain:12 dB,P1dB:10dBm,+8V DC,With Heatsink	Rev.1.1