泰莱微波 Talent Microwave

Suzhou Talent Microwave,Inc
sales@talentmw.com
www.talentmw.com

Coax Directional Coupler

14.5-18GHz/40dB Coupling/N Female

Model: TC-145180-40N

TC-145180-40N is a coaxial directional coupler that delivers a 40 dB nominal coupling level and 5 dB minimum directivity across the full frequency range from 14.5 to 18 GHz. It is a three-port passive device that can couple a portion of the power from the main transmission line to the auxiliary line in a directional manner.

Features:

- Output Frequency:14.5-18GHz
- Coupling: 40dB Typ
- Stackable mechanical design
- Low Insertion Loss
- Moderate Directivity
- 50 Ohm Matched Input / Output

Applications:

- Test Labs
- Instrumentations
- Sub-assemblies

电气特性 Electrical Characteristics:

参数 Parameter	Min	Typ	Max	单位 Units
工作频率 Frequency Range	14.5		18	GHz
插入损耗 Insertion Loss (不含耦合插损 Excl Coupling)			0.8	dB
耦合度 Coupling		40±1		dB
方向性 Directivity	5	8		dB
耐功率 Power Handling			50	W
驻波 VSWR			1.6	:1
阻抗 Impedance		50		Ohms

机械特性 Mechanical Specifications:

参数 Parameter	指标 Value	单位 Units
操作温度 Operating Temperature	-55-+85	℃
输入/输出接口 Input/Output Connector	N Female/N Female	
尺寸 Size	39*20*20	mm

Suzhou Talent Microwave,Inc
sales@talentmw.com
www.talentmw.com

外形图 Outline Drawing:

Unit:mm

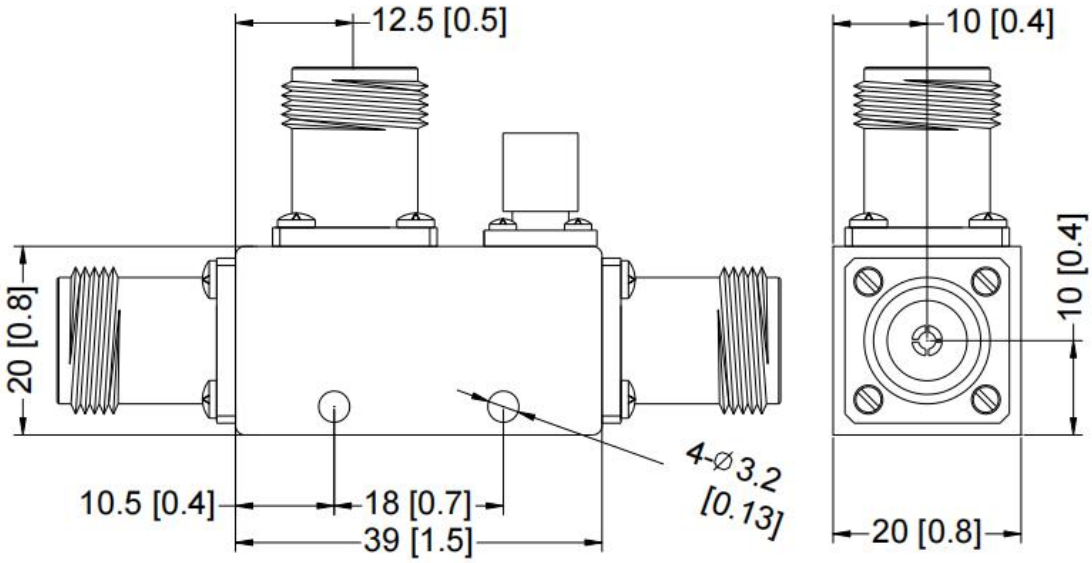

ESD Protection: Strictly adhere to ESD precautions to prevent electrostatic damage.

订货信息 Ordering Information:

标准型号 Base Number	描述 Description	版本号 Revision
TC-145180-40N	Coaxial Directional Coupler 14.5-18GHz, Coulping:40dB, N Female	Rev.1.0