泰莱微波
Talent Microwave

Suzhou Talent Microwave,Inc
sales@talentmw.com
www.talentmw.com

3dB Coaxial 180 Degree Hybrid Coupler

1-2GHz/180-Degrees

Model: TBG-1020-3S-180

The TBG-1020-3S-180 is a coaxial 180 degree hybrid coupler that operates over a 1 to 2GHz bandwidth, with typical 3 dB coupling and maximum 0.5dB insertion loss. The minimum port to port isolation for the coupler is 22dB. The input and output port configuration offers coax adapter structure with SMA female.

Features:

- Frequency range: 1-2GHz
- Insertion Loss: 0.5dB Max
- Coupling: 3dB Typ
- Designed for Optimal Phase/Amplitude Balance

Applications:

- Communication systems
- Lab Test
- Instrumentations

电气特性 Electrical Characteristics:

参数 Parameter	Min	Typ	Max	单位 Units
频率范围 Frequency range	1		2	GHz
插损 Insertion Loss		0.4	0.5	dB
耦合度 Coupling		3		dB
隔离度 Isolation	22	23		dB
幅度平衡 Amplitude Balance			±0.5	dB
相位平衡 Phase Balance			±10	°
驻波 VSWR		1.25	1.35	:1
耐功率 Power Handling			50	W
阻抗 Impedance		50		Ohms

机械特性 Mechanical Specifications:

参数 Parameter	指标 Value	单位 Units
操作温度 Operating Temerature	-45 To +85	℃
相对湿度 Relative Humidity	0~90	%
输入/输出接口 Input /Output Connector	SMA Female/SMA Female	
尺寸 Size	76*60*6.5	mm

Suzhou Talent Microwave,Inc
sales@talentmw.com
www.talentmw.com

外形图 Outline Drawing:

Unit:mm(inch)

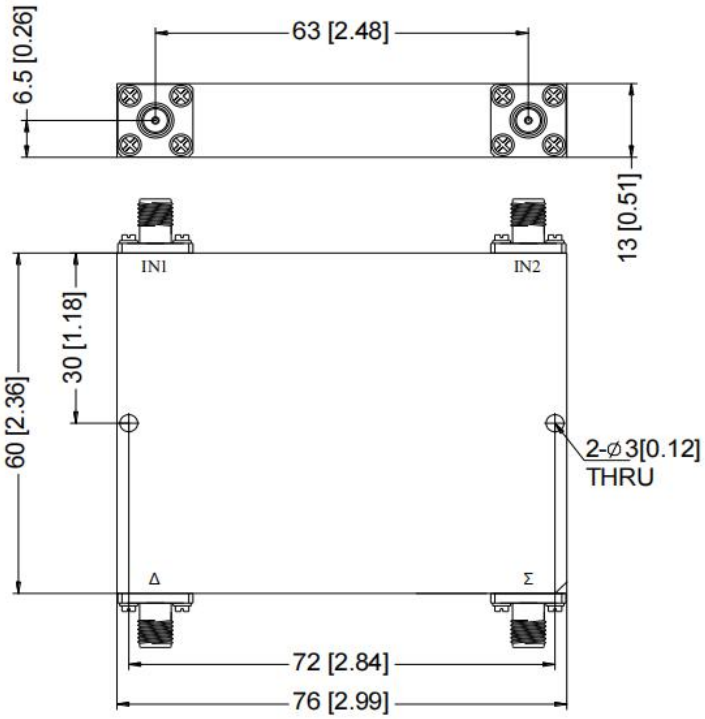

ESD Protection: Strictly adhere to ESD precautions to prevent electrostatic damage.

订货信息 Ordering Information:

标准型号 Base Number	描述 Description	版本号 Revision
TBG-1020-3S-180	3dB Coaxial 180 Degree Hybrid Coupler, 1-2GHz, SMA Female	Rev.1.0

泰莱微波
Talent Microwave

Suzhou Talent Microwave,Inc
sales@talentmw.com
www.talentmw.com

典型曲线 Typical Performance Data:

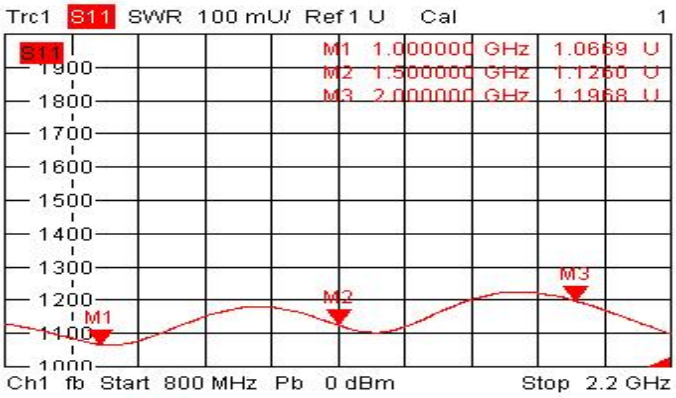

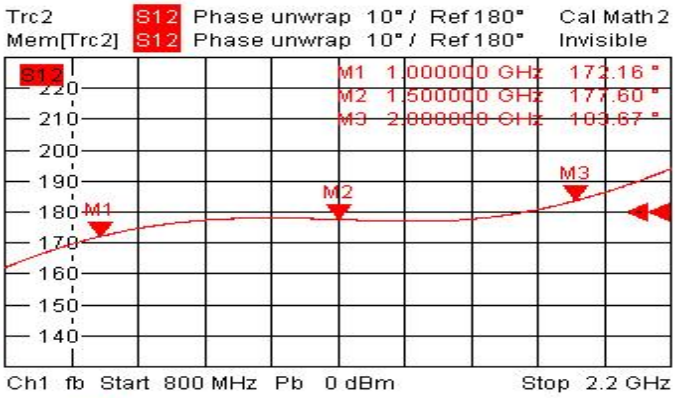

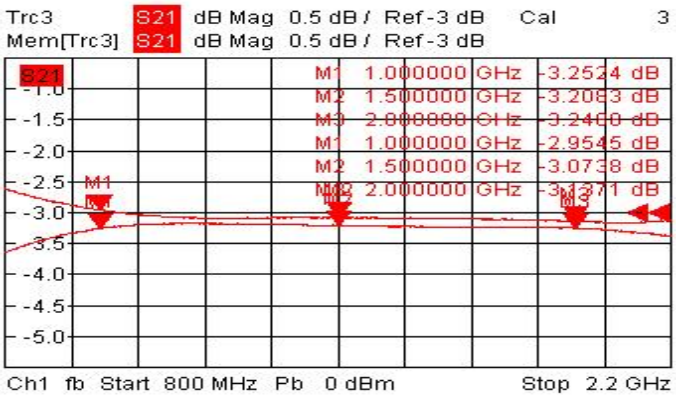

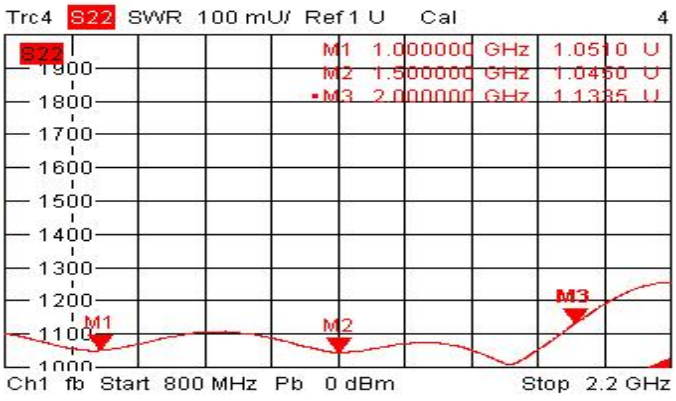

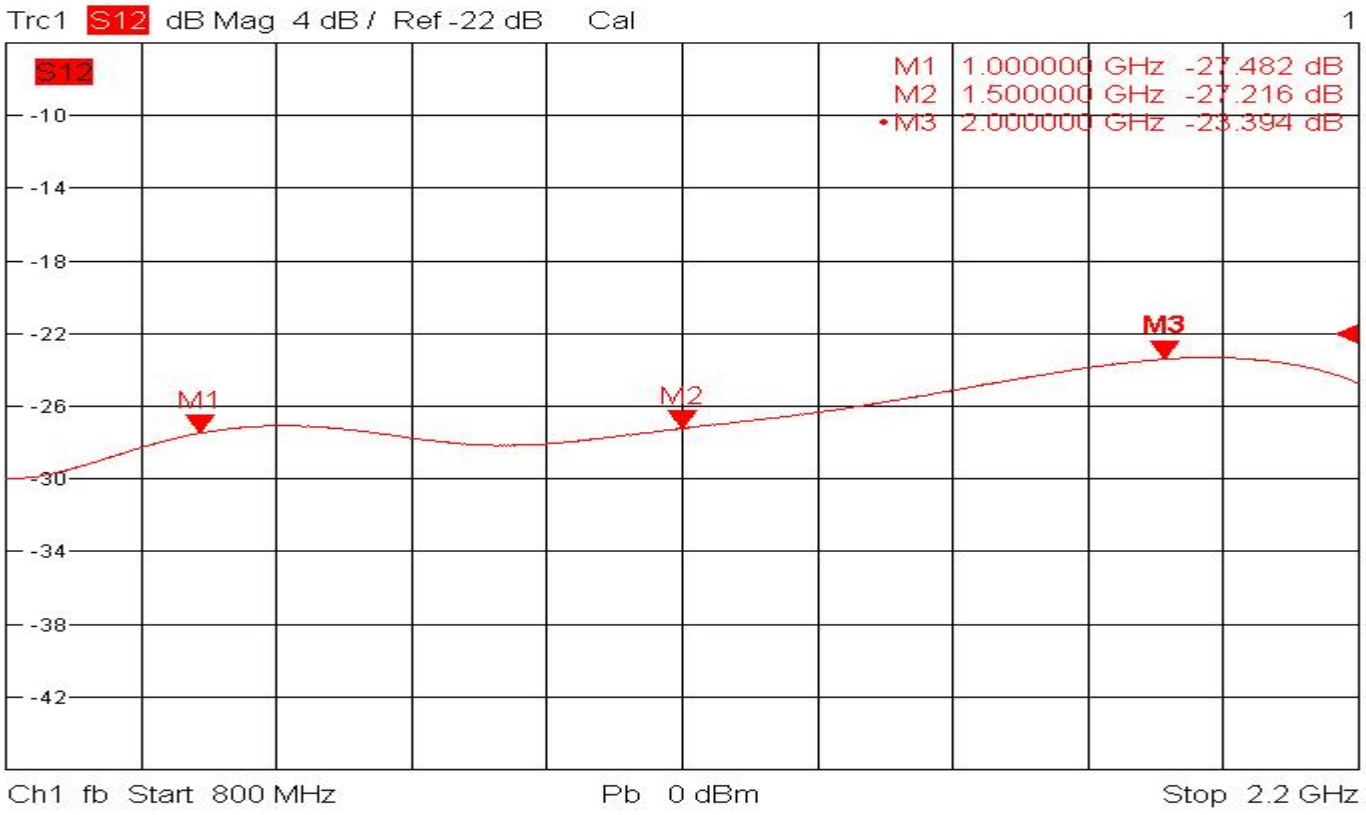

Note: Above data is for ref only, actual data may vary from unit to unit depending on operating environment and other factors like material lots etc.