Suzhou Talent Microwave,Inc
sales@talentmw.com
www.talentmw.com

Waveguide to Coax Adapter, End Launch

WR-08/0.8mm Female/90-140GHz

Model: TL-08WCA0.8E

The TL-08WCA0.8E is end launch waveguide to coax adapters that cover the frequency range of 90 to 140GHz. It is designed for an efficient transition between the rectangular waveguide and 0.8 mm coax connector.

Features:

- Operating Frequency 90 to 140GHz
- Lower Insertion Loss and VSWR
- Instrumentation Grade
- DC Short Circuit

Applications:

- Test Lab
- Instrumentations
- Sub-assemblies

Electrical Characteristics:

Parameter	Min	Typ	Max	Units
Frequency Range	90		140	GHz
Insertion Loss		1		dB
VSWR		1.6		:1
Power Handing			2	W

Envrionmental And Physical Characteristics:

Description	Parameter	Units
Material	Aluminum	
Finish	Gold Plated	
Coax Connector	0.8mm Female	
Waveguide	WR-08/UG-387/U-M	

Suzhou Talent Microwave,Inc
sales@talentmw.com
www.talentmw.com

Outline Drawing:

Unit:mm

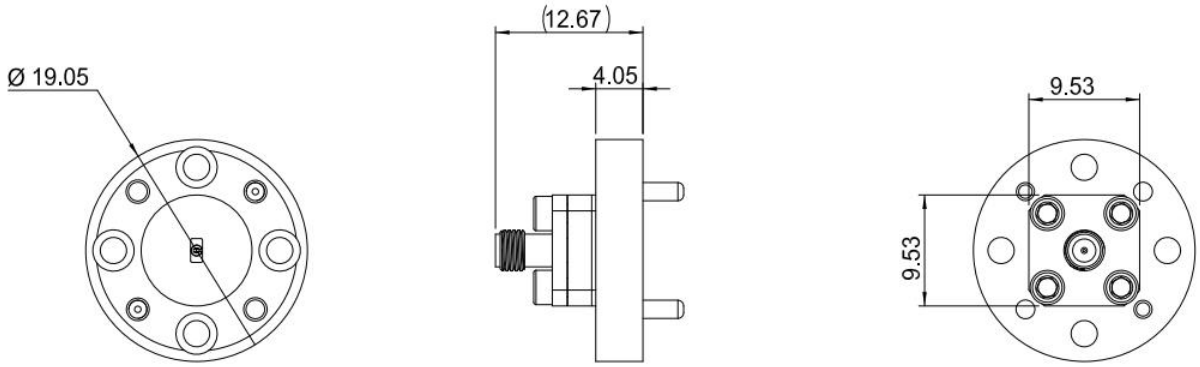

ESD Protection: Strictly adhere to ESD precautions to prevent electrostatic damage.

Ordering Information:

Base Number	Description	Revision
TL-08WCA0.8E	Waveguide to Coax Adapter, End Launch WR-08/0.8mm Female,90-140GHz	Rev.1.0

Suzhou Talent Microwave,Inc
sales@talentmw.com
www.talentmw.com

Typical Performance Data:

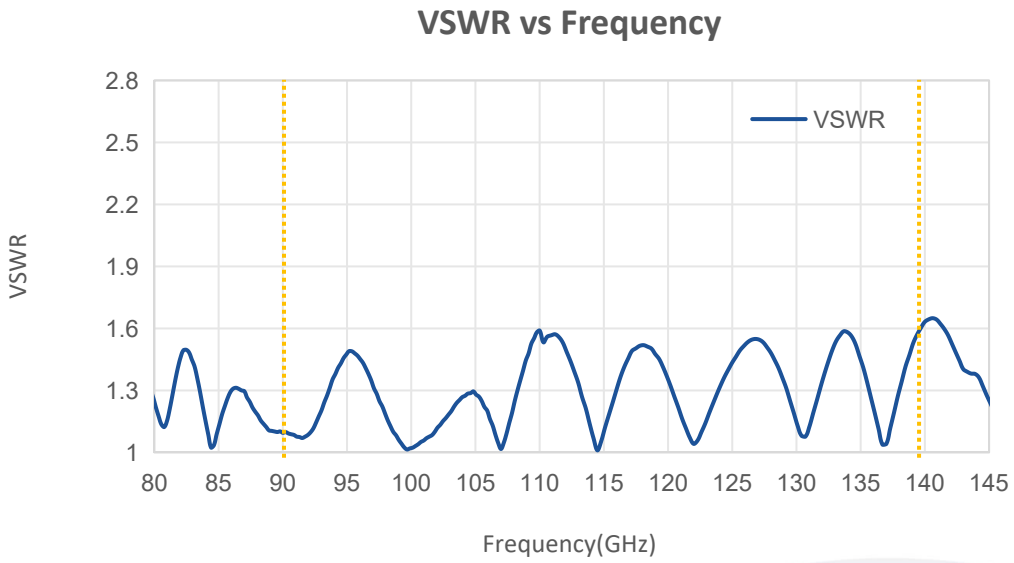

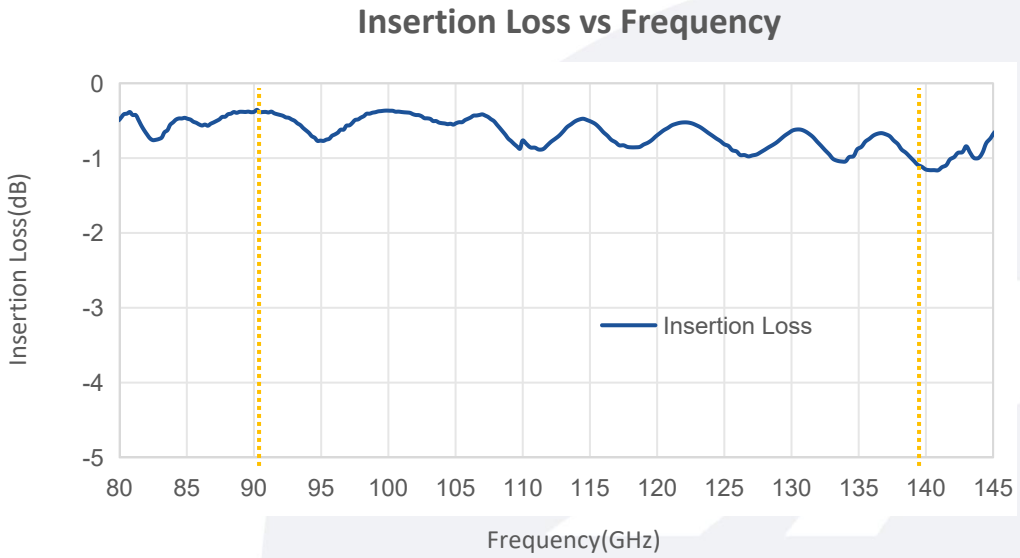

Note: Above data is for ref only, actual data may vary from unit to unit depending on operating environment and other factors like material lots etc.