Suzhou Talent Microwave,Inc
sales@talentmw.com
www.talentmw.com

Y-band Amplitude Detector

210-230GHz /-20 dBm,Input Power

Model: TPSD-210230-04

TPSD-210230-04 is a WR-4.3 amplitude detector that can be used for narrow band applications. The detector is zero biased and intended for small signal detection purposes. The detector exhibits high sensitivity characteristics across the frequency of 210 to 230GHz.

Features:

- Frequency range:210-230GHz
- High Sensitivity

Applications:

- Test Instrumentations

Electrical Characteristics:

Parameter	Min	Typ	Max	Units
Frequency range	210		230	GHz
Voltage Sensitivity		3000		mV/mW
RF Input Power	-50		-20	dBm
Input VSWR		2.5		:1
Output Voltage Polarity		Positive		

Envrionmental And Physical Characteristics:

Parameter	Value	Units
Operating Temerature	0 To +50	℃
RF Port	WR-4.3/UG-387/U	
DC Port	SMA Female	
Finish	Gold Plated	

Absolute Maximum Ratings:

Parameter	Value
RF Input Power	+10 dBm

Suzhou Talent Microwave,Inc
sales@talentmw.com
www.talentmw.com

Outline Drawing:

Unit:Inch(mm)

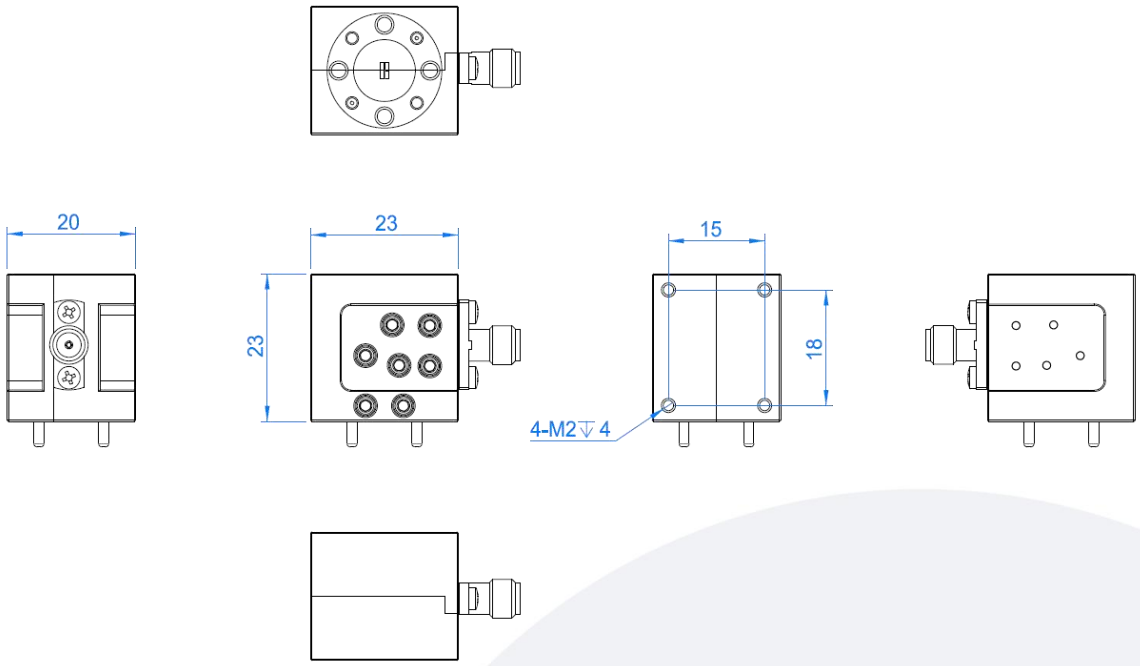

ESD Protection: Strictly adhere to ESD precautions to prevent electrostatic damage.

Ordering Information:

Base Number	Desciption	Revision
TPSD-210230-04	Y-band Amplitude Detector, 210-230GHz, Voltage sensitivity :3000 mV/mW Typ.	Rev.1.1