Suzhou Talent Microwave Inc.
sales@TalentMW.com
www.TalentMW.com

Part No.: TC-10180-20S-100W

20dB Dual Directional Coupler SMA Female 50Ω 1-18 GHz

Electrical:

Frequency Range:	1-18 GHz
Coupling:	20± 1.6db
Insertion Loss:	1.2db typ, 1.5db max
Directivity:	8db typ, 7db min
VSWR:	1.5 max
Power Handling:	100 Watt
Impedance:	50 OHMS

Mechanical:

Temperature Range:	-45° C - +85° C
Connectors:	SMA-Female
Relative Humidity:	0 ~ 90%

Outline Drawing:
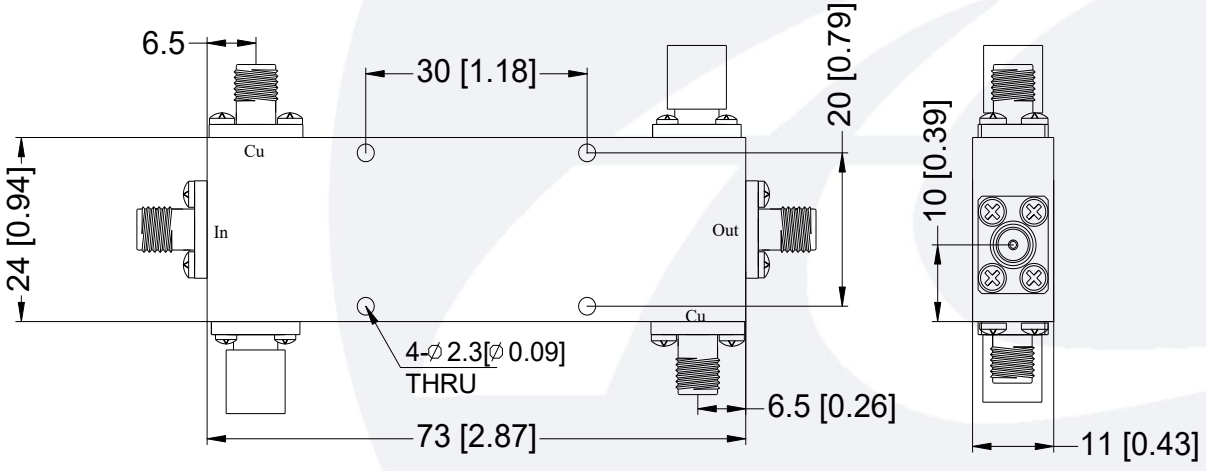
Unit: mm